Profilers Samplers Flotation

mclanelabs.com

# Phytoplankton System

## User Manual

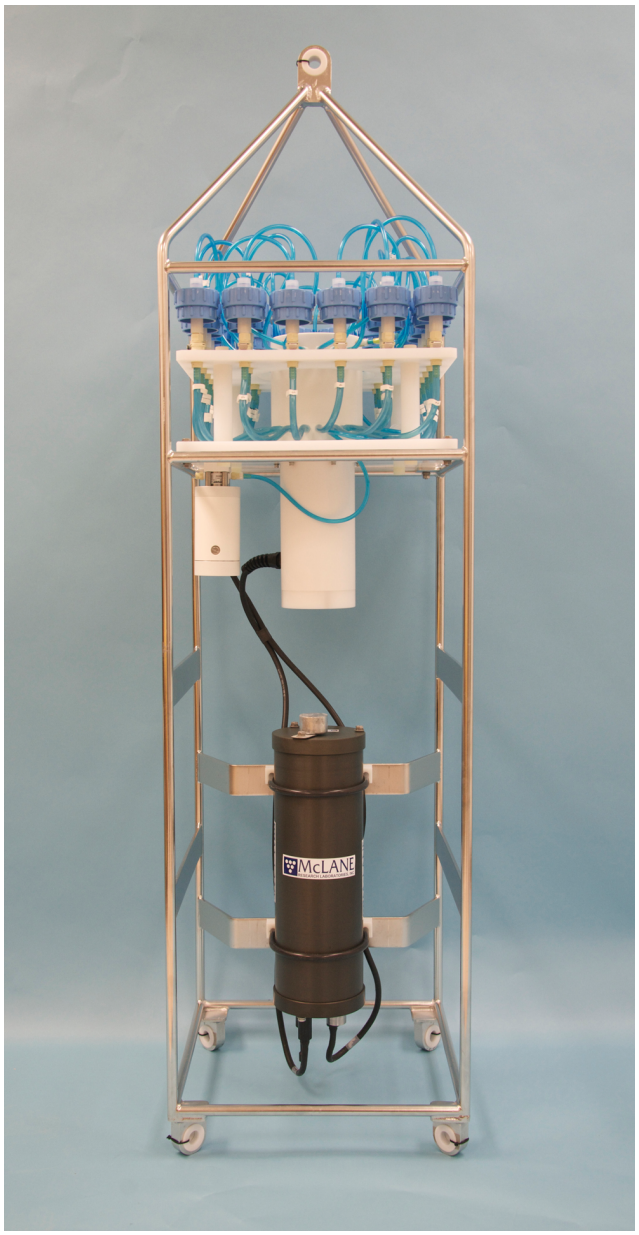


2019 McLane Research Laboratories, Inc., Rev.19.F.21

Tel: +1 (508) 495-4000
mclane@mclanelabs.com
Skype: mclane_research
www.mclanelabs.com

# PPS User Manual Table of Contents

**Chapter 1 Introduction ..... 1-1**
User Key ..... 1-1
Customer Resources ..... 1-1
Technical Support ..... 1-2
Instrument Training ..... 1-2
**Chapter 2 System Description ..... 2-1**
System Overview ..... 2-1
System Components ..... 2-2
Frame ..... 2-2
Controller Housing ..... 2-2
End Caps and O-Rings ..... 2-2
End Cap Bulkhead Connectors ..... 2-4
Pressure Relief Valve ..... 2-5
Pressure Relief Valve Upgrade ..... 2-5
25-Port Valve ..... 2-6
Pump ..... 2-6
Filter Holders ..... 2-7
Home Port Flush Filter ..... 2-7
PPS Toolkit ..... 2-8
Serial Number ..... 2-8
Electronics ..... 2-9
Communications Bulkhead Connector Styles ..... 2-10
Main Battery ..... 2-11
Backup Battery ..... 2-12
Optional PPS Features ..... 2-13
Optional Fixative Valve ..... 2-13
PPS System Hydraulics with Fixative Valve during a Sample ..... 2-15
PPS System Hydraulics, Fixative Valve during Post-Sample Fixative Flush ..... 2-16
Optional Antifouling Solution Reservoir ..... 2-16
**Chapter 3 PPS Deployment Description ..... 3-1**
Deployment Overview ..... 3-1
Procedure Parameters ..... 3-1
Water Flush ..... 3-1
Sample ..... 3-2
Fixative Flush ..... 3-3
Antifouling Flush ..... 3-4

**Chapter 4 Getting Started** ..... **4-1**
Connecting the Sampler to a Computer ..... 4-1
Connecting a Computer ..... 4-1
Installing and Configuring McLaneTerm ..... 4-2
Powering up the Sampler ..... 4-3
Opening the Controller Housing ..... 4-3
Connecting the Batteries ..... 4-5
Establishing Communication with the Firmware ..... 4-6
Waking the Sampler from Low Power Sleep Mode ..... 4-7
**Chapter 5 User Interface** ..... **5-1**
Main Menu ..... 5-1
<1> Set Time ..... 5-2
<2> Diagnostics ..... 5-3
Battery Warnings ..... 5-3
<3> Manual Operations ..... 5-4
<4> Sleep ..... 5-5
<5> Create Schedule ..... 5-5
<6> Deploy System ..... 5-5
<7> Offload Data ..... 5-5
<8> Contacting McLane ..... 5-6
Configuration Menu ..... 5-6
Configuring the System ..... 5-7
**Chapter 6 Deployment Preparation** ..... **6-1**
Closing and Sealing the Controller Housing ..... 6-1
Checking the Zinc Anodes ..... 6-1
Priming the PPS ..... 6-2
Preparing the Fixative Valve for a Deployment ..... 6-7
Priming the Fixative Valve Plumbing ..... 6-7
Filling the Fixative Bags ..... 6-10
Filling the Fixative Exhaust Collection Bag ..... 6-12
Installing the Water Flush Filter ..... 6-13
Preparing Antifouling Reservoir for a Deployment ..... 6-15
Programming Deployment Parameters ..... 6-19
Program a Deployment Schedule ..... 6-19
Programming Event Parameters ..... 6-21
Sample Pump Data Period ..... 6-22
Fixative Flush Programming ..... 6-22
Program Optional Antifouling Flush ..... 6-24
Verifying Deployment Parameters and Modifying Individual Events ..... 6-25
Instrument Current Consumption ..... 6-28
Example of Estimating Battery Life for One Year Deployment ..... 6-29
Starting the Deployment ..... 6-30
Final steps before Deployment ..... 6-32

**Chapter 7 Deployment Recovery, and System Maintenance ..... 7-1**
Recovery Procedure ..... 7-1
Retrieving Filters for Sample Analysis ..... 7-1
Offloading Deployment Data ..... 7-1
Offload menu options: ..... 7-2
System Maintenance ..... 7-6
Cleaning the PPS Fluid Paths and Filter Holders ..... 7-6
Cleaning the PPS System Plumbing ..... 7-6
Cleaning the Fixative Valve Plumbing ..... 7-7
Cleaning and Inspecting the Filter Holders ..... 7-8
Rinsing the System ..... 7-8
Inspecting the Pump ..... 7-9
Volume Test ..... 7-9
Pump Gear Inspection ..... 7-10
Storage ..... 7-11
**Appendix A Adaptive Sampling Firmware ..... A-1**
Adaptive Deployment ..... A-1
Command Prompt ..... A-2
Waking the Instrument from the Command Prompt ..... A-2
AWT Commands (Adaptive PPS Sampling) ..... A-3
Command Help ..... A-3
Using Automated Adaptive Commands ..... A-17
SET Command ..... A-17
Deploy Commands ..... A-17
Sample Command ..... A-17
Ending the Deployment ..... A-19
Offload Command ..... A-21
Using Manual Commands ..... A-22
Configuring the Fixative Valve and Antifouling Options ..... A-23
Fixative Valve Option ..... A-24
Antifouling Flush Option ..... A-25
Adaptive Deployment with Fixative Valve and Antifouling ..... A-28
Using On-Demand Fixative and Antifouling Commands ..... A-27
**Appendix B External Power and RS-422 Communication ..... B-1**
Electronics ..... B-1
Power Requirements ..... B-3
Estimated Battery Endurance Calculation with RS-422 Communication ..... B-3
Example of Determining Battery Life for One Year Deployment ..... B-4
Changing the Communication Protocol ..... B-5
**Appendix C Training Videos ..... C-1**

# PPS User Manual List of Figures


Figure 2-1: PPS Full View ..... 2-1
Figure 2-2: Controller Housing ..... 2-2
Figure 2-3: Sampler O-Ring Installation – Correct Placement is Critical ..... 2-3
Figure 2-4: Controller Housing End Cap Bulkhead Connectors ..... 2-4
Figure 2-5: Valve ..... 2-6
Figure 2-6: Pump Head Gear and Replaceable Magnet ..... 2-6
Figure 2-7: Filter Holders ..... 2-7
Figure 2-8: Water Flush Filter Holder ..... 2-7
Figure 2-9: PPS Toolkit ..... 2-8
Figure 2-10: USB Communications ..... 2-9
Figure 2-11: Communications Cable Connector Style ..... 2-10
Figure 2-12: Drop-in Battery Holder for 'D' Cell Batteries ..... 2-11
Figure 2-13: A21-1000 Battery Pack ..... 2-11
Figure 2-14: Backup Battery 9V and AAA Styles (Older Model PPS systems) ..... 2-12
Figure 2-15: PPS with Optional Fixative Valve Box ..... 2-14
Figure 2-16: Pumping Operation Schematic – Fixative Valve ..... 2-15
Figure 2-17: Pumping Operation Schematic – Fixative Valve Post-Sample Flush ..... 2-16
Figure 3-1: Water Flush ..... 3-2
Figure 3-2: Sample ..... 3-2
Figure 3-3: Fixative Flush ..... 3-3
Figure 3-4: Antifouling Flush ..... 3-4
Figure 4-1: Communications Cable ..... 4-1
Figure 4-2: Releasing Pressure Relief Valve (Flat Style) ..... 4-3
Figure 4-3: Releasing Pressure Relief Valve (Style with Release Tool) ..... 4-4
Figure 4-4 Separating the Housing and End Cap ..... 4-5
Figure 4-5 Connecting the Battery ..... 4-5
Figure 4-6: Connecting the COM Cable ..... 4-6
Figure 4-7: Main Menu ..... 4-7
Figure 5-1: PPS Main Menu ..... 5-1
Figure 5-2: Set Time ..... 5-2
Figure 5-3: Diagnostics ..... 5-3
Figure 5-4: Manual Operation Menu ..... 5-4
Figure 5-5: Suspend/Sleep Mode ..... 5-5
Figure 5-6: McLane Contact Information ..... 5-6
Figure 5-7: Configuration Menu ..... 5-6
Figure 6-1: Priming Setup ..... 6-2
Figure 6-2: Open Filter Holder 1 ..... 6-4
Figure 6-3: Injecting Water with Syringe ..... 6-4

Figure 6-4: Reattaching Top and Bottom of Filter ..... 6-5
Figure 6-5: Connecting Hose-G ..... 6-6
Figure 6-6: Fixative Box ..... 6-8
Figure 6-7: Inject Syringe Contents into Fixative Bag ..... 6-10
Figure 6-8: Place Hose-F into Fixative Container ..... 6-11
Figure 6-9: Pinch Fixative Bag Hose, Attach to Intake-2 Hose ..... 6-11
Figure 6-10: Roll Fixative Bag to Release Air ..... 6-12
Figure 6-11: Disassembling Water Flush Filter ..... 6-13
Figure 6-12: Attaching Hose-E ..... 6-16
Figure 6-13: Fill Antifouling Tube ..... 6-17
Figure 6-14: Schedule Menu ..... 6-20
Figure 6-15: Event Parameters ..... 6-21
Figure 6-16: Enable Fixative Flush ..... 6-23
Figure 6-17: Enable Antifouling Flush ..... 6-24
Figure 6-18: Schedule Verification ..... 6-25
Figure 6-19: Changing Event Parameters ..... 6-26
Figure 6-20: Schedule Verification ..... 6-27
Figure 6-21: Start a Deployment ..... 6-30
Figure 6-22: System Ready to Deploy ..... 6-31
Figure 7-1: Offload/Display Data File Menu ..... 7-1
Figure 7-2: Offload/Display Data File – Display All (1 of 3) ..... 7-3
Figure 7-3: Offload/Display Data File – Display All (2 of 3) ..... 7-4
Figure 7-4: Offload/Display Data File – Display All (3 of 3) ..... 7-5
Figure 7-5: Pump Housing, Gears, and Pump Head Magnet ..... 7-10
Figure A-1: Adaptive Deployment Mode ..... A-2
Figure A-2: Command Help ..... A-3
Figure A-3: SET Command ..... A-17
Figure A-4: STARTDEPLOY Command ..... A-17
Figure A-5: SAMPLE and SET Commands ..... A-18
Figure A-6: Deployment Ends After Last Sample ..... A-19
Figure A-7: End Deployment Using STOPDEPLOY ..... A-20
Figure A-8: OFFLOAD Command ..... A-21
Figure A-9: Manually Commanding Pumping ..... A-22
Figure A-10: Enabling the Fixative Valve Option ..... A-23
Figure A-11: Defining the Available Fixative ..... A-23
Figure A-12: Setting the Fixative Parameters ..... A-23
Figure A-13: Enabling the Antifouling Option ..... A-24
Figure A-14: Defining the Available Antifouling Solution ..... A-24
Figure A-15: Setting the Antifouling Parameters ..... A-24
Figure A-16: Adaptive Deployment, Fixative, Antifouling (Screen 1 of 2) ..... A-25
Figure A-17: Adaptive Deployment, Fixative, Antifouling (Screen 2 of 2) ..... A-26

Figure A-18: Applying Fixative ..... A-27
Figure A-19: Applying Antifouling ..... A-28
Figure B-1: Endcap with External Power and RS-422 Option ..... B-1
Figure B-2: Electronics with External Power/RS-422 Circuit Board ..... B-1
Figure B-3: RS-422 Cable Drawing ..... B-2
Figure B-4: RS-422 and RS-232 Labels on Circuit Board ..... B-5
Figure B-5: Gently Grasp Jumper with Extractor ..... B-5
Figure B-6: Lift Jumper Out of Socket ..... B-5
Figure B-7: Place the Jumper in Socket ..... B-6
Figure B-8: Press to Secure Jumper ..... B-6

# Chapter 1
# Introduction

This user manual is designed to provide support from the first steps of powering on and communicating with the instrument, to the final steps of recovering data from a recently deployed system, and storing the instrument. Read this manual and keep a copy as a reference if you plan on using a PPS. McLane user manuals are updated frequently and the latest version can always be downloaded from our website.

## User Key

This User Manual contains the following symbols that call attention to information:

| | | |
|---|---|---|
| | **Note** | This symbol indicates information and tips that are helpful for operating the instrument. |
| | **Important** | This symbol indicates information that could affect key product operations. |
| | **Caution** | This symbol indicates information that must be followed to prevent instrument damage or user injury. |

## Customer Resources

McLane Research Laboratories is on the Web at http://www.mclanelabs.com or via email at mclane@mclanelabs.com. The PPS pages on the McLane website contain links to documentation including Technical Bulletins, and papers that describe the development and use of the PPS.

## Technical Support

When contacting McLane for technical support, please provide the following:

- Serial number is printed on a label attached to the controller housing, on the Contact McLane screen and also on the Main Menu screen.
- A description of the problem.
- Any relevant capture files (deployment setup, offload data, pumping data stream and so on – capturing all your communications is critical for successful technical support).

## Instrument Training

McLane also offers a 1 day PPS training course at our facility free of charge with the purchase of a new instrument. Participants conduct trial deployments and work directly with members of the McLane engineering staff. Conducting trial deployments is a beneficial way to learn system operations before actual field investigations. For more product training information refer to www.mclanelabs.com.

# Chapter 2
# System Description

## System Overview

The McLane Phytoplankton Sampler (PPS) is an autonomous time-series particulate sampler that filters up to 24 individual water samples through 47mm .7 micron filters. Samples are collected by user-defined time-series events. The 25 port valve physically isolates samples and pumps samples through the selected filter position before passing through the 50, 125, or 250 ml/min pump. The maximum volume per sample is 10 liters. The data recorded during a deployment includes flow rates, volume pumped, pump feedback, power, temperature and event times. This data is offloaded from the PPS after deployment and used for sample analysis.

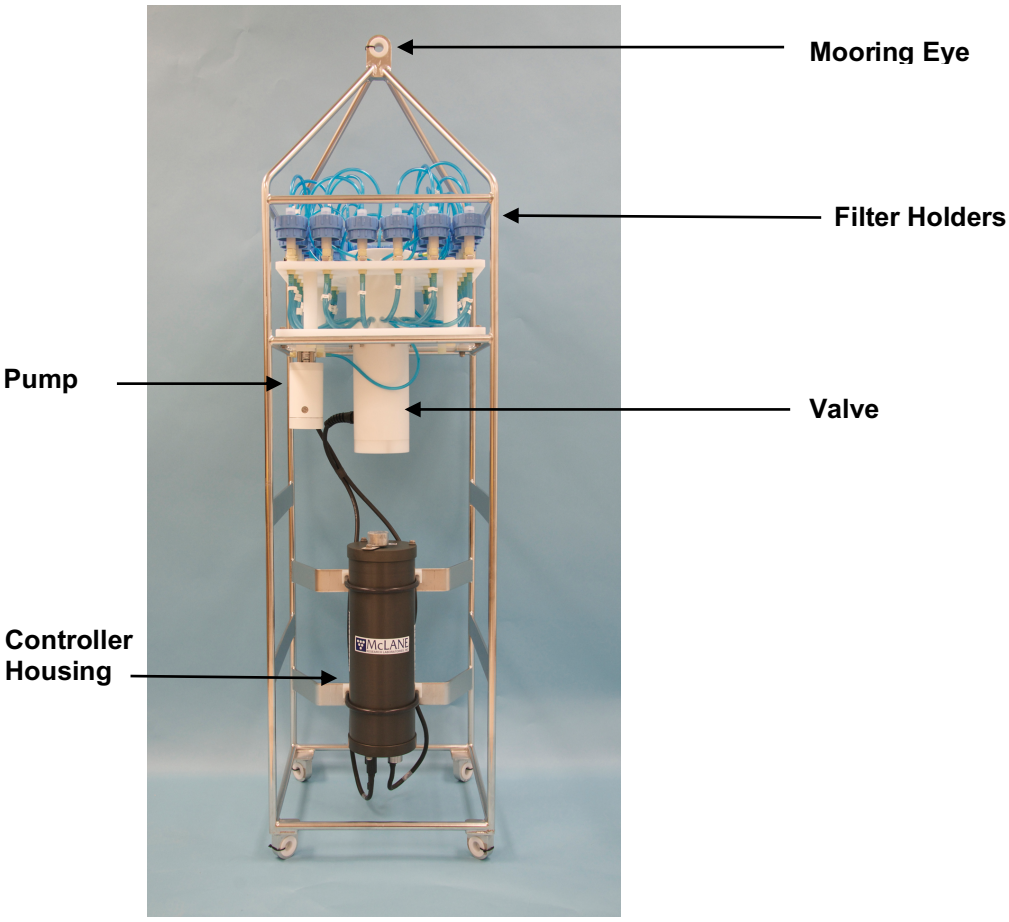


*Figure 2-1: PPS Full View*

## System Components

System Components include the frame, controller housing, end caps, 25-port valve and pump. These components are explained in more detail in the section that follows.

### Frame

Components are protected in an electro-polished stainless steel welded frame (titanium frame is optional). The frame can be an inline part of a high-tension (up to 2,200 kg) ocean mooring and has a built-in top bridle and four mooring eyes at the bottom for a chain or cable bridle. Each mooring eye accommodates a 5/8" shackle, and has an insulator for corrosion protection. The frame has extra mounting space near the controller housing for other instruments.

### Controller Housing

The PPS controller housing is a heat-treated aluminum alloy cylinder, rated to a depth of 5,500m. The housing holds the battery and electronics. This User Manual contains detailed instructions for opening the controller housing. Follow these instructions and the recommended safety precautions when opening the controller housing.

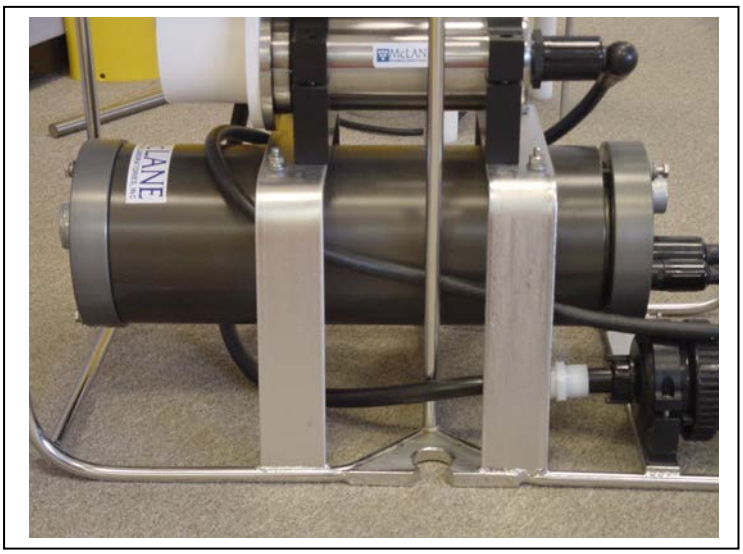

*Figure 2-2: Controller Housing*

### End Caps and O-Rings

The battery and electronics are fastened to the inside of the controller housing top end cap. Each end cap includes two 70 durometer Buna-N round section o-rings (2-246 and 2-242) and one 90 durometer backup ring (8-242). O-rings and surfaces should be regularly cleaned with isopropyl

alcohol. O-rings should be lubricated with provided Parker O-Lube and replaced when necessary. The toolkit has spare O-rings. More o-rings can be purchased from McLane.

O-ring maintenance and correct placement is critical to keep the controller housing sealed from water intrusion. Incorrect o-ring placement results in cracks or splits that could affect the o-ring seal and cause water damage to the controller. Water damage from incorrectly placed or maintained o-rings could void the sampler warranty.

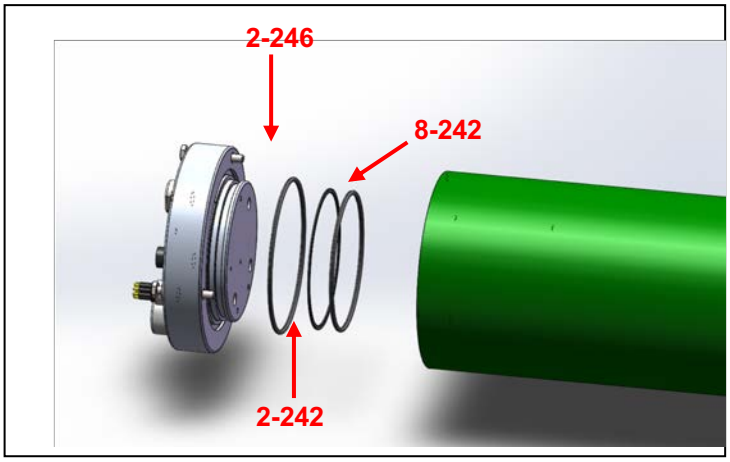


*Figure 2-3: Sampler O-Ring Installation – Correct Placement is Critical*

## End Cap Bulkhead Connectors

The end cap has bulkhead connectors for the Communications connector, Pump, and Valve (Figure 2-4). The bulkhead assignment (P, V, C) is etched into the end cap. A zinc anode is attached to each end on the controller housing end cap to prevent corrosion. Spare zincs are included in the toolkit.

Do not overtighten the end cap bolts and do not replace the stainless steel hardware with any other hardware. The Toolkit includes spare hardware, or contact mclane@mclanelabs.com.

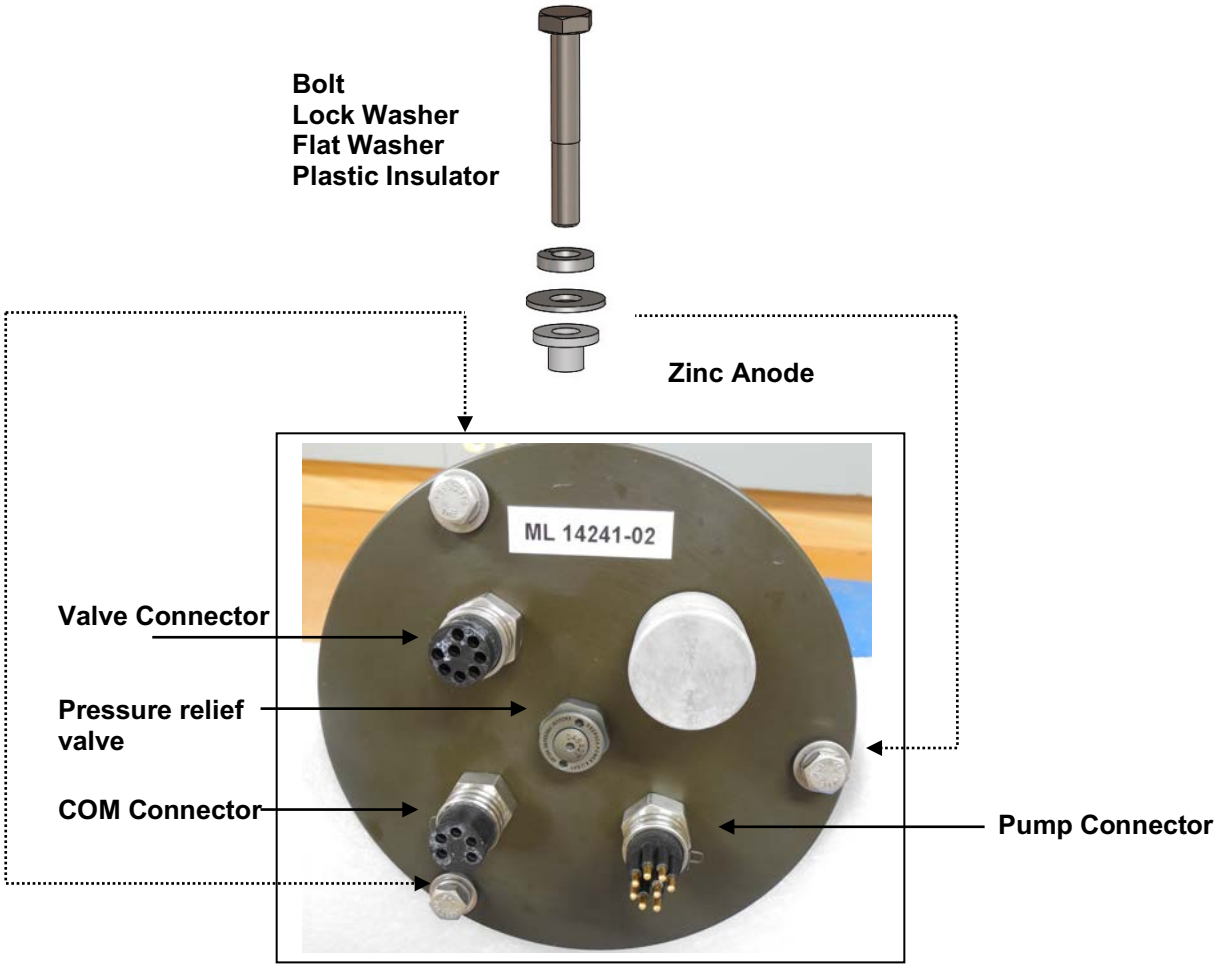


*Figure 2-4: Controller Housing End Cap Bulkhead Connectors*

## Pressure Relief Valve

Attention and care should be taken in maintaining, operating, and opening the pressure housing. All PPS systems shipped after summer 2015 have a pressure relief valve (PRV) on the controller housing.

Though unlikely, an unsafe internal controller housing pressure is possible, resulting from the chemical reaction between alkaline electrolye and anodized aluminum due to battery failure with or without the intrusion of seawater. There can be enough pressure to cause the endcap bolts to fail, especially when one or more are loosened or removed.

Instructions under 'Powering on the Sampler' explain how to use the end cap pressure relief valve.

## Pressure Relief Valve Upgrade

McLane offers a Pressure Relief valve upgrade retrofit for all controller housings (includes installation, not including shipping and insurance costs). The end-cap and anodizing must be in suitable condition for PRV retrofits. Contact mclane@mclanelabs.com for more information about the PRV retrofit.

## 25-Port Valve

The PPS dual-head, 25-port rotary valve directs water through 24 individual filters at programmed times during a deployment. The top head has a single intake port and 25 exhaust ports, and the bottom head has 25 intake ports and a single exhaust port. An optical sensor and slotted disk determine rotor position. The motor, gear head, and optical sensor are in a pressure compensated PVC plastic housing filled with Dow Corning 200 fluid (200cSt.). The valve top shows the port numbers, and the rotor position indicator points to the currently aligned port. The filter holders are connected between two valve heads. One port is open on each head at one time.

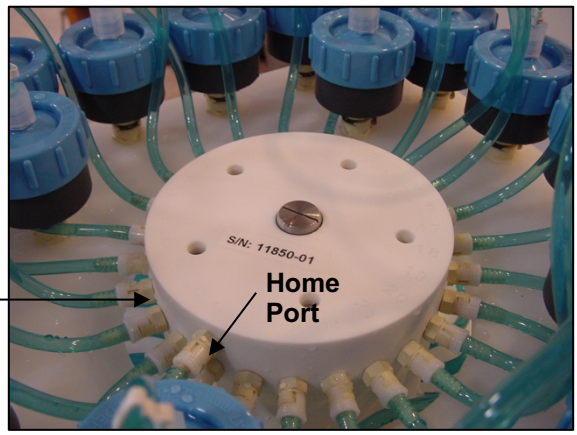


*Figure 2-5: Valve*

## Pump

The PPS can have a 125 or 250 ml/min positive displacement graphite gear pump installed. The pump head is type 316 stainless steel and has user replaceable carbon gears and magnet. A brushless DC 3-phase motor is magnetically coupled to the pump head, and driven by an algorithm designed to limit differential pressure at filters while maximizing battery life.

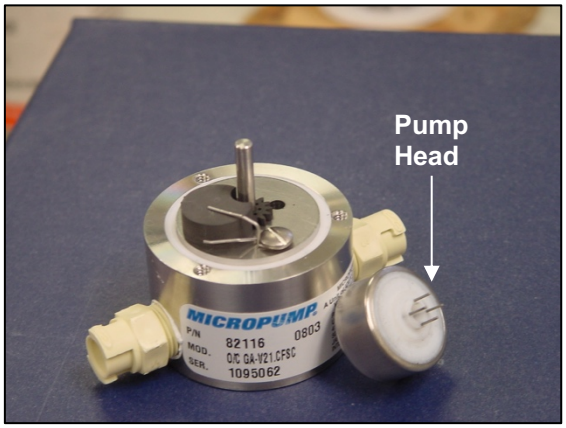


*Figure 2-6: Pump Head Gear and Replaceable Magnet*

## Filter Holders

The PPS collects samples on twenty-four 47 mm filter holders. Each filter holder is connected in series between the intake head (top half of the valve) and the exhaust head (lower half of the valve). The pump draws water out from the bottom of the filter creating a pressure gradient that pulls ambient seawater into the filter holder and through the filter. After each sample is taken, the valve returns to Home Port (Port 0), and seals the sample in the filter holder.

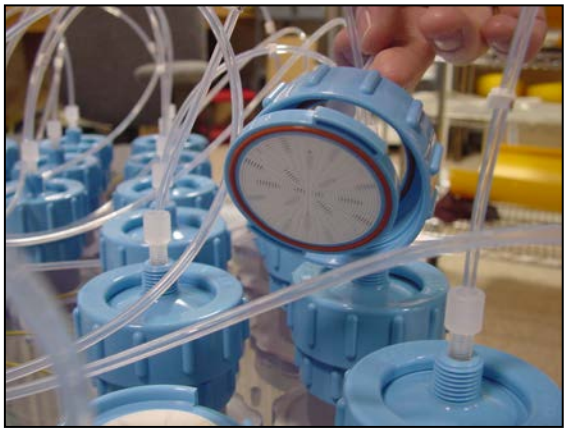

*Figure 2-7: Filter Holders*

## Home Port Flush Filter

Home Port (Port 0) can be used to flush standing water from the valve intake tube and valve heads before each sample is collected. This water flush prevents sample contamination and reduces accumulated bio-fouling. A filter assembly with a 25mm filter holder holds a filter with a pore size between 3 and 20 microns to prevent large suspended particles from entering the pump while the valve is being flushed. Replace this filter before every deployment.

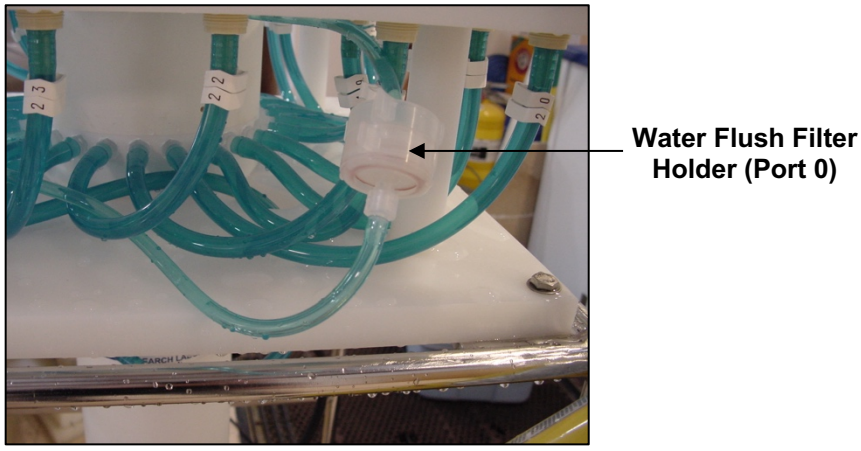


*Figure 2-8: Water Flush Filter Holder*

## PPS Toolkit

PPS systems with the Fixative Valve option have a 2 liter fixative reservoir bag and a 2 liter exhaust collection bag installed inside of a fixative box. Different fixative bag sizes can be configured in the firmware. Each PPS is shipped with a toolkit that contains the necessary tools, materials and devices to use the PPS. The toolkit and contents are referred to throughout this User Manual, and should remain with the instrument at all times. The exhaust bag must be the same size as the intake bag, or larger.

*Figure 2-9: PPS Toolkit*

The PPS toolkit in Figure 2-9 is shown only as an example. Do not use the photo to compare with your actual toolkit contents.

## Serial Number

The white plastic base plate contains a serial number label. The controller housing end cap, pump assembly, valve assembly, and system menu also display the serial number.

## Electronics

The PPS firmware runs on the Persistor CF2 microcontroller. Older PPS systems use the TattleTale 8 (TT8) microcontroller which is discontinued. Most of this User Manual can apply to both current and older McLane instruments. However, significant firmware, hardware, and procedural changes have been made to the PPS with the CF2 microcontroller and some sections will not apply to older systems.

Contact mclane@mclanelabs.com for information about upgrading from the TT8 to the CF2 microcontroller. McLane recommends this upgrade. We offer only limited support on devices that use the TT8 microcontroller.

The PPS electronics communicate using RS-232 serial communications and a terminal emulator, McLaneTerm. See Chapter 4 in this User Manual. "Getting Started" for more information about McLaneTerm which is provided with the system and must be installed on the computer that will connect to the PPS. A communications cable included in the toolkit connects the PPS controller with a computer. Computers that do not have a built-in RS-232 serial port use a USB to RS-232 converter that is also included in the toolkit.

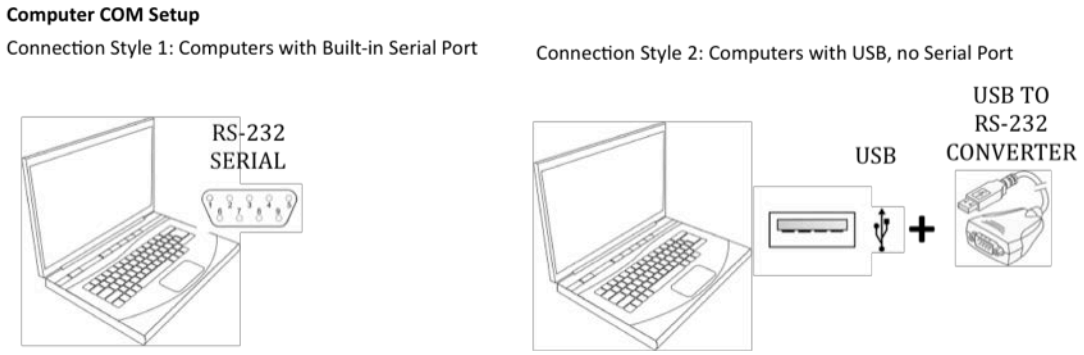


*Figure 2-10: USB Communications*

## Communications Bulkhead Connector Styles

The communications cable bulkhead connector (connection to the sampler) is a 5-pin MCBH style. Some older instruments may have a 3-pin XSG style bulkhead connector.

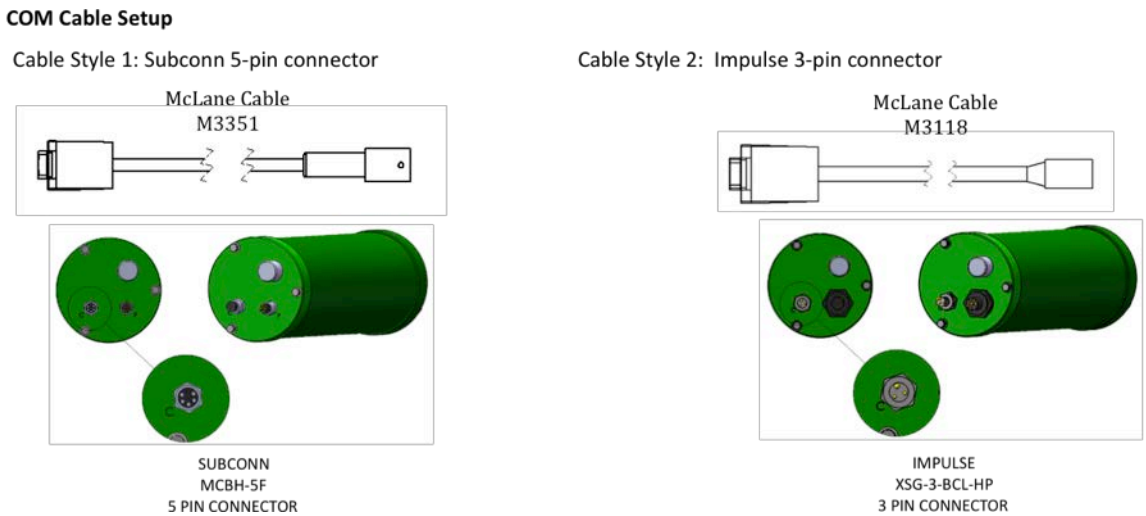


*Figure 2-11: Communications Cable Connector Style*

## Main Battery

Depending on the PPS manufacture date, the battery style could have a battery holder for user replaceable 'D' cell alkaline batteries as shown in Figure 2-12 or a battery pack as shown in Figure 2-13.

If using the battery holder with user replaceable drop-in 'D' cell batteries, be sure to install the batteries with the correct orientation in the holder terminals. An instructional video showing drop in battery replacement is shown on the PPS video pages at www.mclanelabs.com.

*Figure 2-12: Drop-in Battery Holder for 'D' Cell Batteries*

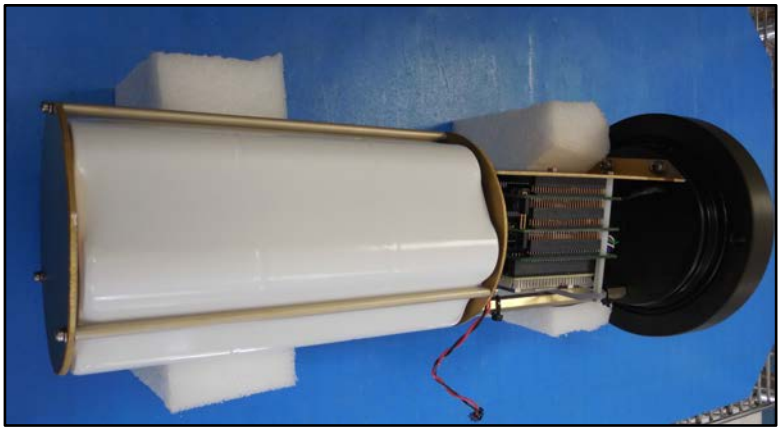

*Figure 2-13: A21-1000 Battery Pack*

The instrument can perform pump and valve operations while the system voltage is above 18 VDC. When the system voltage drops below 18 VDC, the instrument will enter low power sleep mode, and when awake, only limited functions will be available at the Main Menu.

Always take standard electrostatic discharge (ESD) precautions when handling the electronics.

## Backup Battery

After the spring of 2015, new McLane CF2-based instruments no longer require a backup battery. Prior to this change, the backup batteries served as a voltage source for the electronics while in low power sleep mode. Electronics hardware changes made the backup battery unnecessary, and it was eliminated.

Check your system for backup batteries, if they are installed be sure to replace them before each deployment. On the TT8 microcontroller based devices, the backup battery is a 9 volt battery mounted beside the electronics. On the Persistor CF2 microcontroller based devices, the backup battery is a plastic case with two AAA batteries mounted near the electronics.

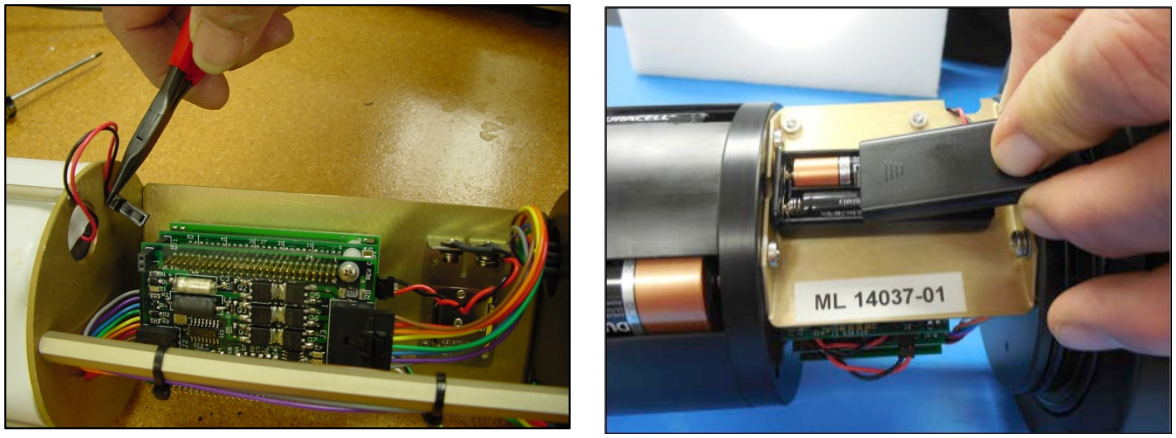


*Figure 2-14: Backup Battery 9V and AAA Styles (Older Model PPS systems)*

## Optional PPS Features

Optional PPS features include:

- Fixative Valve
- Antifouling Solution Reservoir

## Optional Fixative Valve

The optional fixative valve is a pair of three-way isolation solenoid valves that allow the PPS to switch the system intake and exhaust between the environment and a fixative solution. When the fixative valve is installed on a PPS a post-sample fixative flush can be programmed to flood the filter holder with a fixative solution immediately after a sample is taken.

PPS systems with the fixative valve option have a 2 liter fixative bag and a 2 liter exhaust collection bag installed inside of a fixative box. Different fixative bag sizes can be configured in the firmware, although the exhaust bag must be the same size as the intake bag, or larger.

The fixative valve option can be added to a CF2-based PPS. Contact mclane@mclanelabs.com for information about this retrofit.

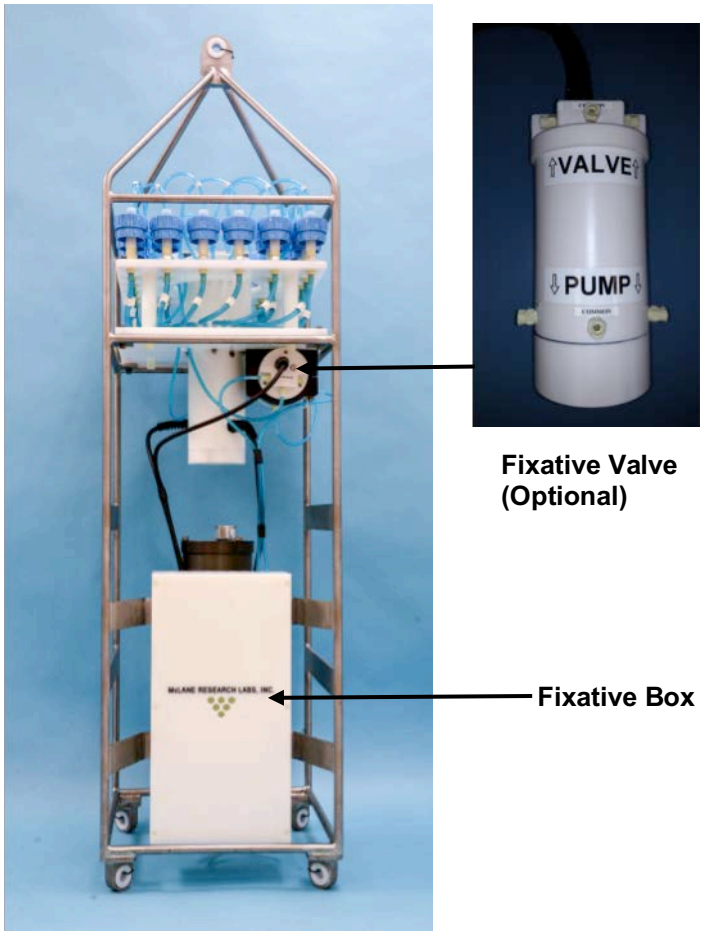


*Figure 2-15: PPS with Optional Fixative Valve Box*

## PPS System Hydraulics with Fixative Valve during a Sample

During a sample, the Fixative Valve is de-energized and in the water position. Water is pumped from the water intake port of the Fixative Valve, to the 25 Port Valve intake port, through the filter holder of the aligned port, out of the 25 port valve exhaust port, and out of the fixative valve water exhaust port.

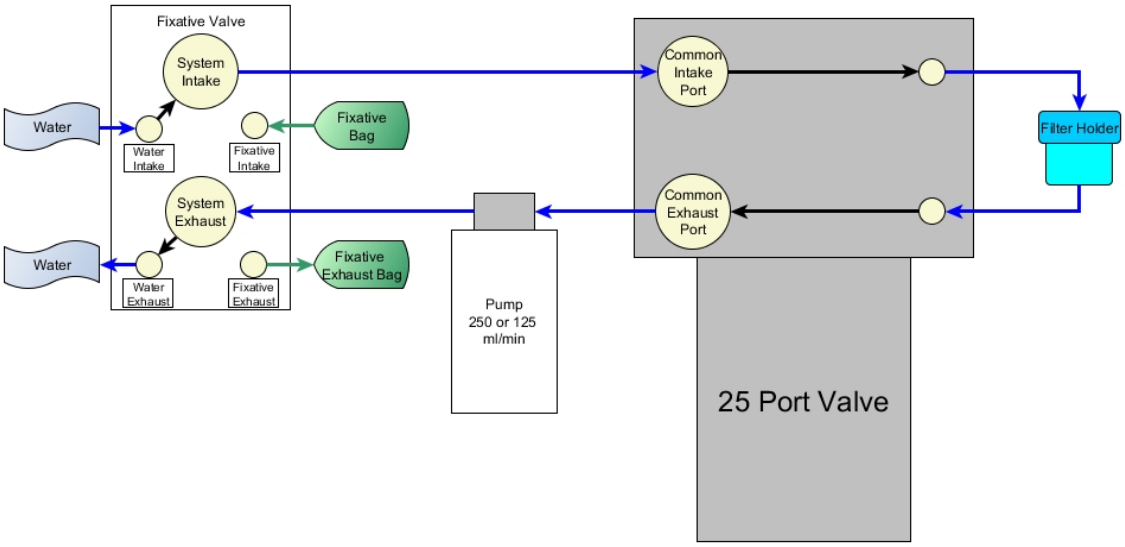


*Figure 2-16: Pumping Operation Schematic – Fixative Valve*

## PPS System Hydraulics with Fixative Valve during a Post-Sample Fixative Flush

Immediately after a sample is taken, the Fixative Valve is energized and switched to the fixative position. Fixative is pumped from the fixative bag through the fixative intake port of the fixative valve, to the 25 Port Valve intake port, through the filter holder of the aligned port, out of the 25 port valve exhaust port, and out of the fixative valve fixative exhaust port into the fixative exhaust bag.

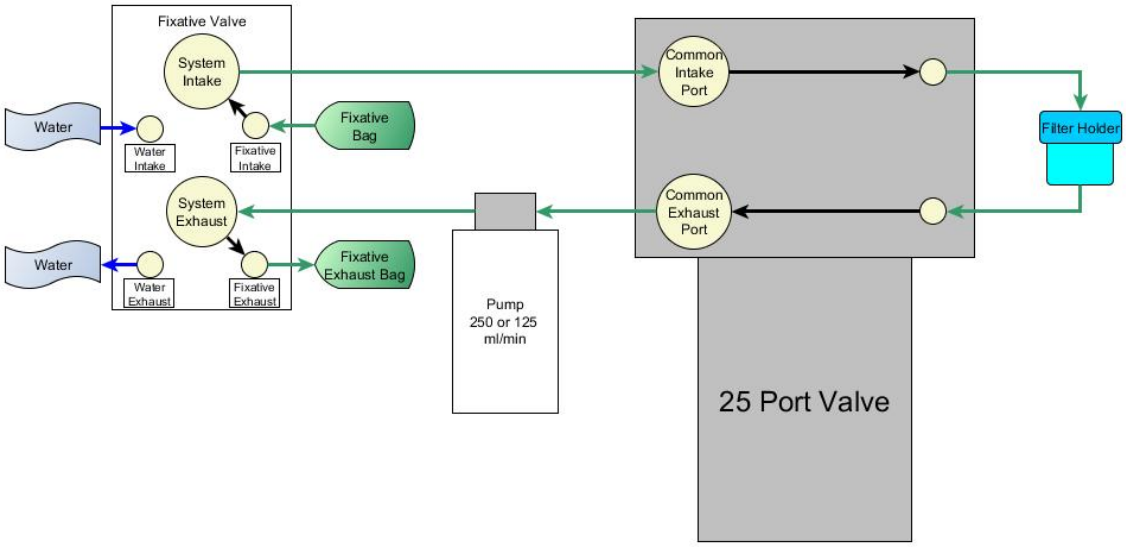


*Figure 2-17: Pumping Operation Schematic – Fixative Valve Post-Sample Flush*

## Optional Antifouling Solution Reservoir

An 800 ml antifouling solution reservoir can be plumbed to port 24 of the 25 port valve, and used to perform a post-sample antifouling flushes. When an antifouling solution reservoir is installed on a PPS, a deployment is reduced to 23 events.

# Chapter 3
# PPS Deployment Description

Topics Covered:

- Deployment Overview.
- Water Flush.
- Sample.
- Fixative Flush.
- Antifouling Flush.

## Deployment Overview

A PPS deployment is made up of 24 scheduled events, and each event is made up of one or more of the procedures described in this section. Each procedure in a deployment event can have a unique set of user-defined pumping instructions. Every event contains at least a Sample, but can also include a water flush, a fixative flush, and an antifouling flush.

### Procedure Parameters

| | |
|---|---|
| Volume | Volume to be pumped during the procedure. |
| Flow Rate | The target flow rate of the procedure. |
| Min. Flow Rate | If filter loading has slowed the flow rate to the minimum flow rate, the procedure is terminated. |
| Time Limit | If the time limit is reached the procedure is terminated. The time limit is defaulted to the volume / minimum flow rate + 1 minute. |

### Water Flush

The Home Port (Port 0) can be used to flush standing water from the valve intake tube and common plumbing before each sample is collected. This water flush prevents sample contamination and reduces accumulated bio-fouling.

| **Parameter** | **125 ml / min pump** | **250 ml / min pump** |
|---|---|---|
| Flow Rate | 100 ml/min | 200 ml/min |
| Volume | 1000 ml | 0-1000 ml |

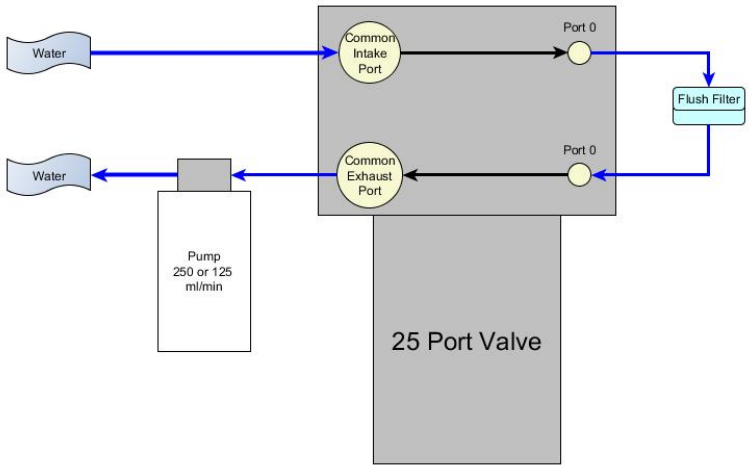


*Figure 3-1: Water Flush*

## Sample

After the water flush the PPS aligns the 25 port valve to the event number filter position and pumps according to the user-defined pumping parameters.

| **Parameter** | **125 ml / min pump** | **250 ml / min pump** |
|---|---|---|
| Flow Rate | 50 -125 ml / min. | 100-250 ml / min. |
| Minimum Flow Rate | 40 - (flow rate - 10) ml / min | 75 - (flow rate - 10) ml / min |
| Volume | 10-10,000 ml | 10-25,000 |

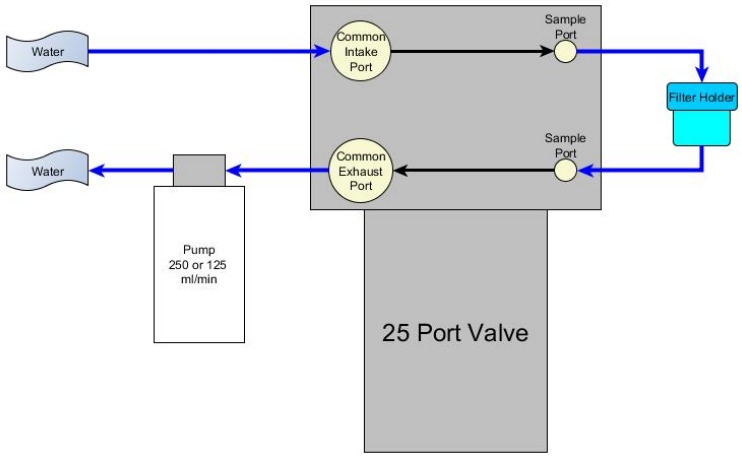


*Figure 3-2: Sample*

## Fixative Flush

If the PPS has the optional fixative valve installed, it can perform a fixative flush immediately after the sample to flood the filter with a fixative solution. Once a sample finishes pumping, the fixative valve is energized and it switches from it's water position to it's fixative position. The pump now draws from the fixative bag, and exhausts into the fixative exhaust collection bag.

| **Parameter** | **125 ml / min pump** | **250 ml / min pump** |
|---|---|---|
| Flow Rate | 50 -125 ml / min | 100 -250 ml / min |
| Minimum Flow Rate | 40 - (flow rate - 10) ml / min | 100 - (flow rate - 10) ml / min |
| Volume | 0 – (total fixative / # of events) | 0 – (total fixative / # of events) |

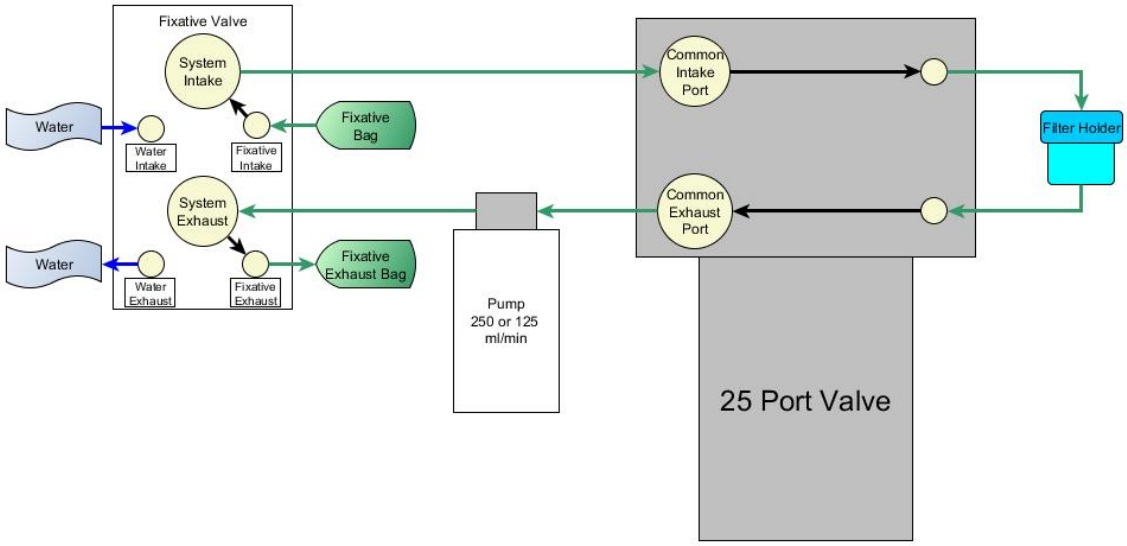


*Figure 3-3: Fixative Flush*

## Antifouling Flush

If the PPS has the optional antifouling reservoir it can finish an event with an antifouling flush. During an antifouling flush the PPS aligns the 25 port valve to port 24 and pumps in reverse into the antifouling reservoir. The water pumped into the reservoir squeezes a bag of antifouling solution, and an equal amount of cleaning solution is pushed through the PPS common plumbing. The cleaning solution remains in all common lines and prevents bio-fouling until the next scheduled event when it is flushed away during the pre-sample water flush.

| **Parameter** | **125 ml / min pump** | **250 ml / min pump** |
|---|---|---|
| Flow Rate | 50 -125 ml / min. | 100 -250 ml / min. |
| Minimum Flow Rate | 40 - (flow rate - 10) ml / min | 75 - (flow rate - 10) ml / min |
| Volume | 0 – total antifouling solution / # of events | 0 - total antifouling solution / # of events |

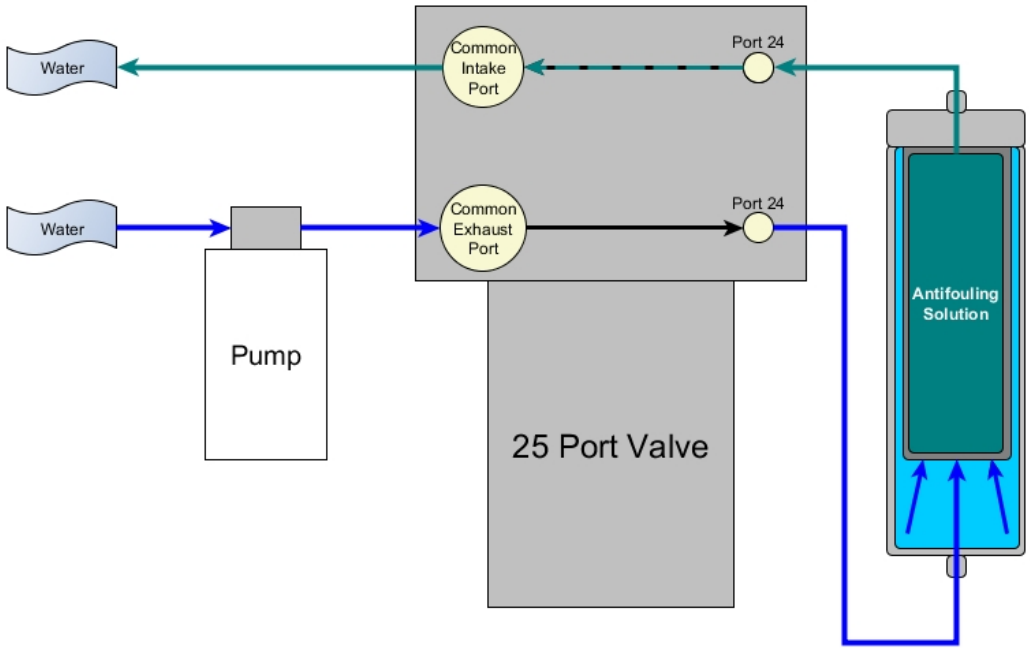


*Figure 3-4: Antifouling Flush*

# Chapter 4
# Getting Started

Topics Covered:

- Connecting to a computer.
- Installing and configuring terminal emulation software on a computer.
- Powering up a McLane Sampler.
- Communicating with a McLane Sampler.
- Waking a McLane Sampler from low power sleep mode.

## Connecting the Sampler to a Computer

Communicating with your instrument requires connecting the communications cable to a computer running terminal emulation, and configuring the terminal emulation software.

### Connecting a Computer

Connect to the instrument by plugging the communications cable from the communications bulkhead on the end cap to a computer RS-232 serial port (the toolkit includes a USB to RS-232 adapter for computers without the built-in RS-232 port). Plug the adapter into the USB port, wait for the drivers to install, and then check the computer's Device Manager for the new USB Serial Port. Windows typically downloads and installs the necessary drivers automatically when the USB to RS-232 adapter is plugged into a USB port.

*Figure 4-1: Communications Cable*

The USB adaptor has LED indicator lights for transmitting and receiving data. Typing any key in terminal emulation should be indicated by the LED. If no LED light flashes on keystrokes, you may have selected the incorrect COM Port.

## Installing and Configuring McLaneTerm

**McLaneTerm** is a terminal emulation program for Microsoft Windows and Mac OSX platforms used to communicate with serial McLane instruments. With McLaneTerm, you can interact with your McLane instrument's text based interface while it is connected to a serial port on your computer. McLaneTerm replaces the terminal emulation tools MotoCross (for CF2) and CrossCut (for TT8).

Creating capture files of all commands and responses with your McLane instrument is a customer best pratice that is critical for successful technical support.

To follow this section, you will need the McLaneTerm software and McLaneTerm User Manual that was included on the instrument's USB drive. McLaneTerm software and the User Manual can also be downloaded at our website www.mclanelabs.com.

- McLaneTerm uses standard Windows and Mac OSX automatic installation programs. Follow the McLaneTerm User Manual if you need instructions to install McLaneTerm on a computer.
- In the McLaneTerm User Manual, follow the sections "Settings" and "Using Commands" to properly setup McLaneTerm software.
- When communication with your McLane instrument is established, proceed to the section that follows next in this User Manual "Powering up the Sampler".

**McLaneTerm system requirements**: Windows® 7 or higher / Mac OS X version 10.7 (Lion) or higher.

## Powering up the Sampler

Connecting the battery is the only way to power on the sampler electronics. This step requires opening the controller housing. Be sure to perform this procedure in a dry area and familiarize yourself with steps for using the Pressure Relief Valve.

### Opening the Controller Housing

Attention and care should be taken in maintaining, operating, and opening the pressure housing. All samplers shipped after summer 2015 have a pressure relief valve (PRV) on the controller housing. This valve releases automatically at a pressure differential greater than 10psi. The PRV style may have a center hole and release tool, or the style may have a flat relief valve that must be manually pulled out.

Observe safety precautions including removing personnel and objects from the path of the end-cap when removing the controller housing.

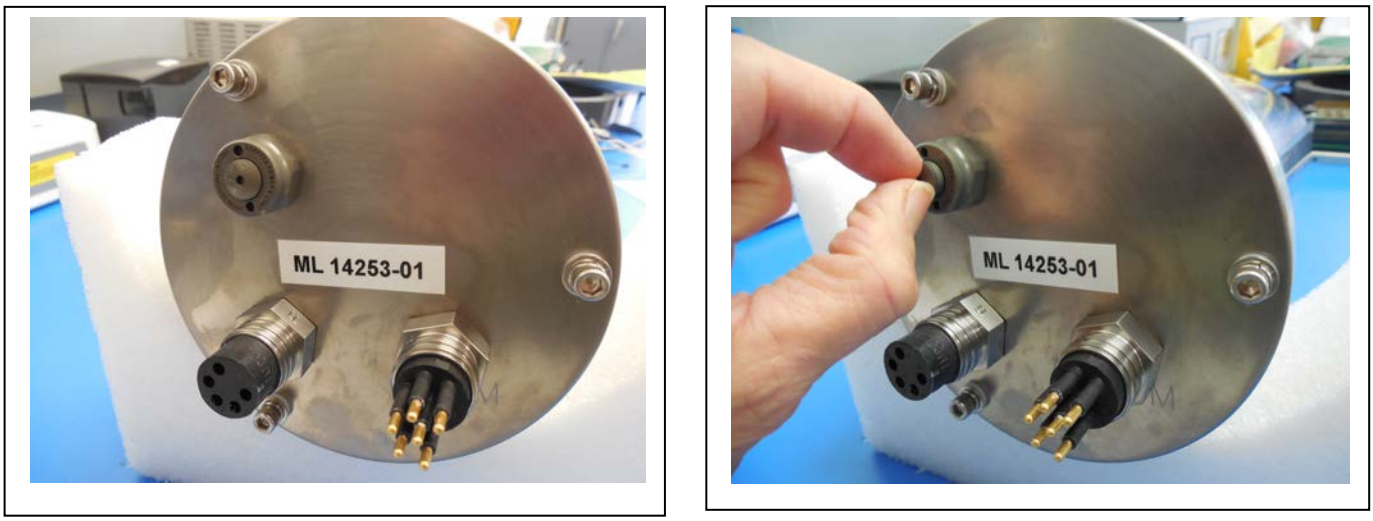


*Figure 4-2: Releasing Pressure Relief Valve (Flat Style)*

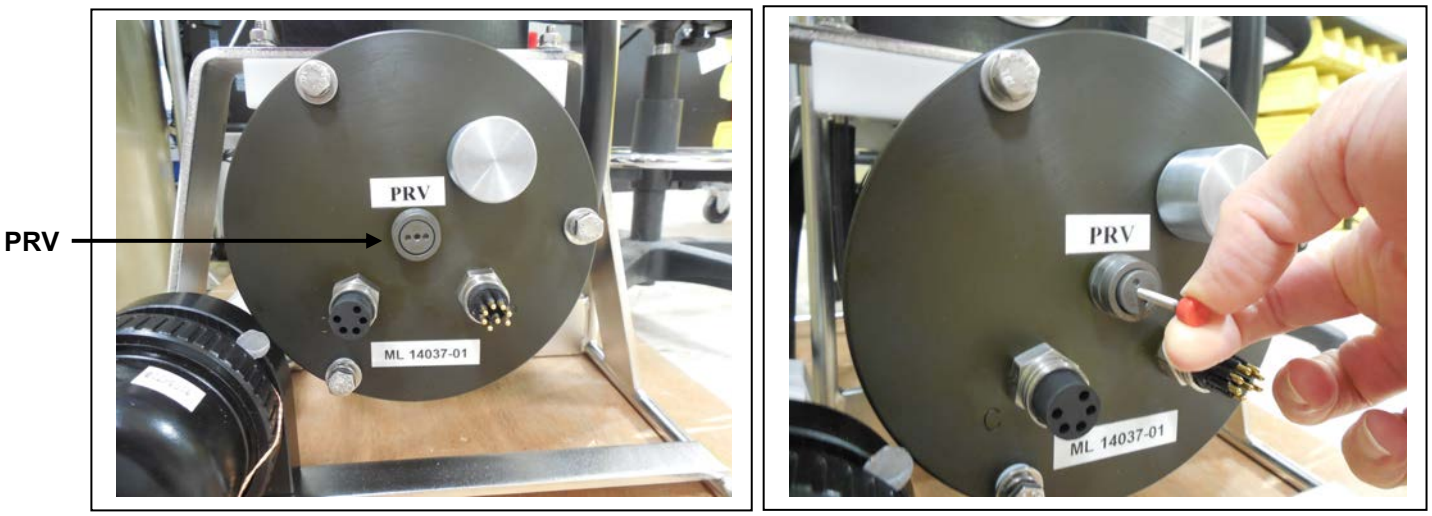


*Figure 4-3: Releasing Pressure Relief Valve (Style with Release Tool)*

1. Disconnect the cables from the end cap (if connected).
2. Slowly pull on the pressure relief valve to release any vacuum or built up pressure in the housing.
3. Loosen each end cap bolt a few turns at a time in a star pattern.
4. If the end cap separates from the housing as you loosen the bolts, this could indicate a possible pressure buildup inside of the housing. Stop loosening bolts and continue to gently pull on the pressure relief valve.
5. Remove and place the end cap hardware somewhere safe. Typically plastic inserts have a snug fit and will remain in the end cap.
6. Grasp the end cap lip with fingertips and pull the end cap out of the housing (Figure 4-4). The end cap to housing seal is tight and sometimes difficult to open. Do not use a tool to pull open the housing. The end cap o-rings can be damaged if objects are used to separate the end cap from the housing.

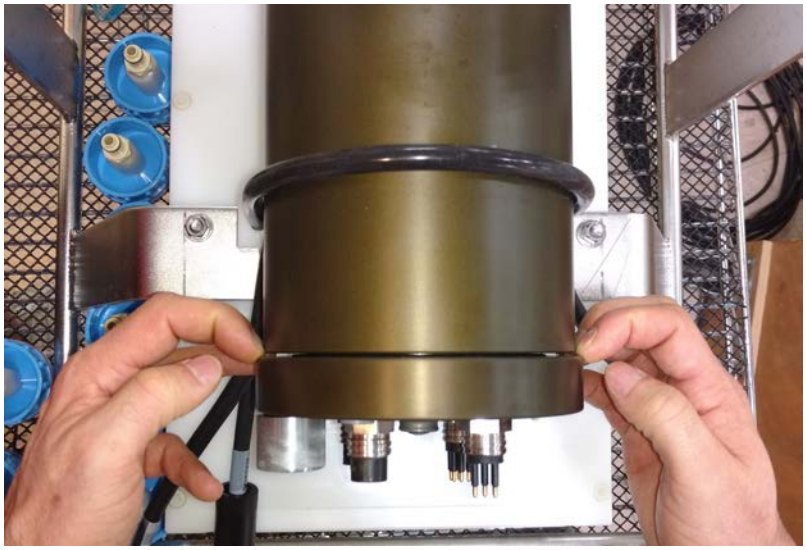

*Figure 4-4*: *Separating the Housing and End Cap*

## Connecting the Batteries

Locate the battery conductors. The black two pin MTE connector will only fit into one connector on the electronics stack. Find the two pin female connector that mates with the battery connector on the Aux / Stepper board and plug in the batteries.

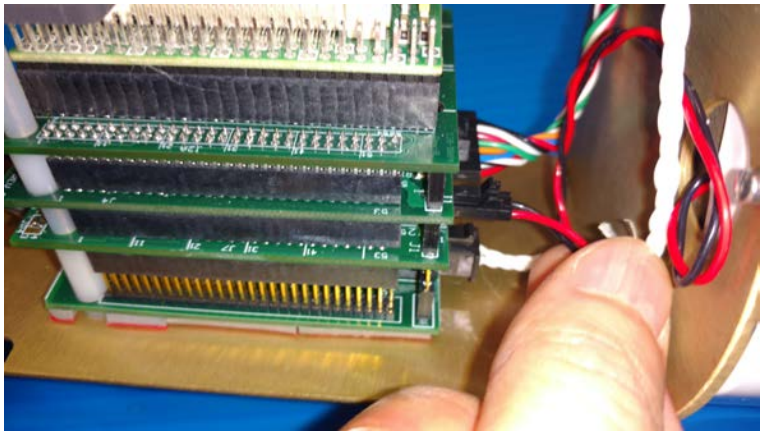

*Figure 4-5*: *Connecting the Battery*

Backup batteries are not installed with firmware v2.05 and higher. Electronics hardware changes made the backup battery unnecessary and it was elminated. If deploying a PPS that still has a  backup battery, install a fresh battery before every deployment.

## Establishing Communication with the Firmware

1. Find the communication cable provided in the toolkit.
2. Connect the communications cable to the computer serial communication port before connecting to the communications connector on the controller end cap.

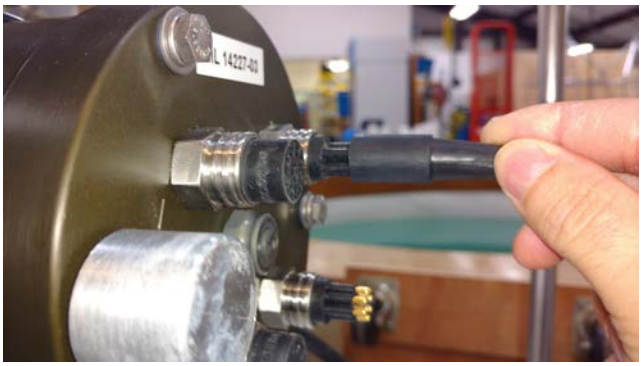

*Figure 4-6: Connecting the COM Cable*

3. Align the bulkhead connection pins, and push the bulkhead in place on the controller end cap.
4. On the computer, open a properly configured McLaneTerm window.
5. Connect the DB9 end of the communication cable to the computer communication port configured in McLaneTerm.
6. Enter [CTRL]-[C] in McLaneTerm. If the computer setup procedures were completed correctly, the Main Menu, a system clock confirmation message, or a message that indicates the system is Suspended will print to the screen.

## Waking the Sampler from Low Power Sleep Mode

The sampler will enter a low power mode if it sits idle for more than 20 minutes. To wake the system from this suspended state, hold down [CTRL]-[C]. After three seconds of holding down [CTRL]-[C], the Main Menu will display (Figure 4-7).

If [CTRL]-[C] is held down for more than 5 seconds and nothing happens, check the previous sections of this chapter to make sure procedures were followed correctly. If your system has backup batteries, confirm they are properly seated in the backup battery housing, and make sure they are plugged into the electronics.

```
CF2-WTS-2.05 R9 L2.3 |  WTS-2.05.c compiled May  9 2016 at 14:09
        WTS-250M  S/N ML00000-00  Water Transfer System
 © 1996-2016 McLane Research Laboratories. All rights reserved.
_____________________________________________________________

Clock reads 01/01/70 00:00:00.  Change [N] ? y

Format is mm/dd/[yyyy or yy] hh:mm:ss

Enter correct time [01/01/1970 00:00:04] ? 10/24/2016 09:58:35

Clock reads 10/24/16 09:58:35.  Change [N] ?
_____________________________________________________________

Configuration: WTS-250M                CF2 V2_05 of May  9 2016
               McLane Research Laboratories, Inc.
                     Water Transfer System
                           ML00000-00


                _________________________________
                            Main Menu
                _________________________________
                    Mon Oct 24 09:58:36 2016

                              Port 99

          <1> Set Time          <5> Create Schedule
          <2> Diagnostics       <6> Deploy System
          <3> Manual Operation  <7> Offload Data
          <4> Sleep             <8> Contacting McLane

          <C> Configure
```

*Figure 4-7: Main Menu*

## Notes

# Chapter 5
# User Interface

This chapter introduces the user interface including the Main and Configuration Menus, and explores some basic functions of the PPS menu driven user interface.

Topics covered:

- PPS Menu System.
- System Configuration.
- Setting the System Time.
- System Diagnostics.
- Manual Operations.

## Main Menu

The Main Menu is the PPS home screen. All operations end up back at the Main Menu when completed. The Main Menu automatically displays after system initialization.

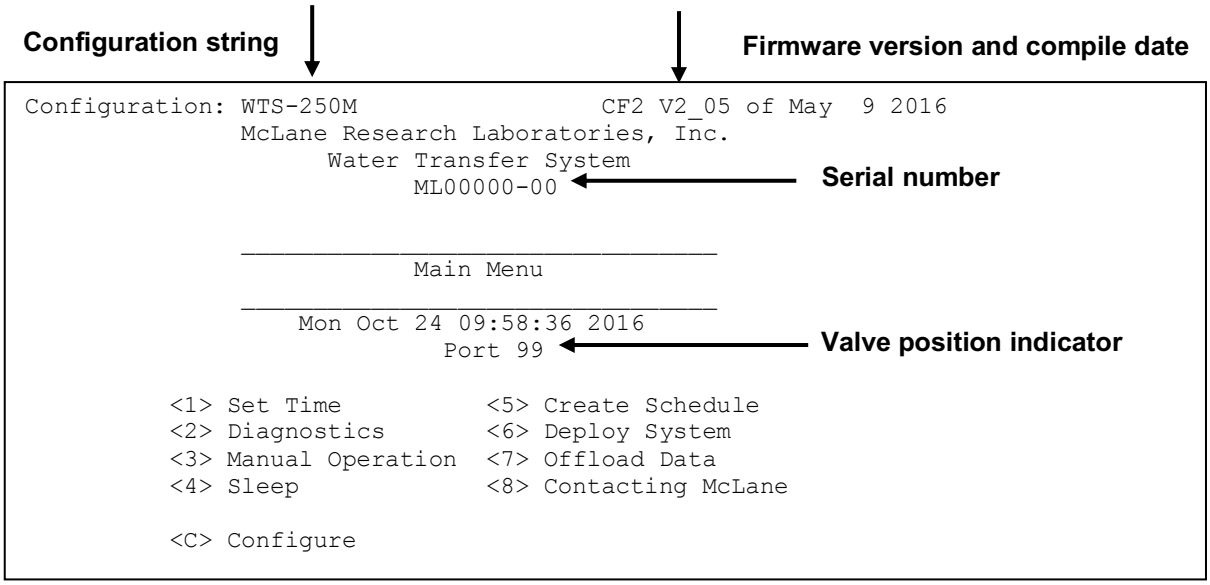


*Figure 5-1: PPS Main Menu*

- **Configuration String**: The configuration string indicates the current instrument configuration. The configuration string in Figure 5-1 indicates the PPS is part of the WTS (Water Transfer System) family, and has a 250 ml/minute Maxon Pump.
- **Firmware Version and Compile Date**: The currently running firmware version and the compile date are displayed on the top right corner of the main menu.

- **Serial Number**: The McLane Serial Number can be found on the Main Menu and should be included in all system inquiries to McLane Research Labs.
- **Valve Position Indicator**: The currently aligned port is displayed here. When a PPS first starts up it has not yet established a home port reference point, and this value will be 99. Before any pumping or valve operation is completed, the system will establish a home port reference and the correct valve position will be displayed.

## <1> Set Time

The set time menu option allows you to program the system real time clock (RTC). McLane recommends setting the RTC during the power-up sequence. When the PPS is powered on, the clock defaults to January 1,1970, 00:00:00. The clock can be set to any date and time in the allowed range and the count will continue from the new value.

To set the time:

1. Select the Set Time menu option.
2. Enter the date and time using the provided format.
3. Accept the changes to the system clock.

```
 Clock reads 02/08/70 02:20:25.  Change [N] ? y

Format is mm/dd/[yyyy or yy] hh:mm:ss

Enter correct time [02/08/1970 02:21:25] ? 03/04/2015 11:29:11

Clock reads 03/04/2015 11:29:11.  Change [N] ?
Initializing data array ..............................
```

*Figure 5-2: Set Time*

## <2> Diagnostics

The Diagnostics menu option will continuously print system data to the screen. The data printed to the screen will vary between system configurations, but always includes the date, time, main battery voltage, and the temperature according to the thermistor on the system electronics. Diagnostics data printed to the screen can be paused and resumed by entering any key into by entering any key into McLaneTerm (terminal emulation). Exit and return to the main menu by entering [CTRL]-[C].

```
Selection [] ? 2

 Press any key to pause/continue display, ^C to exit

10/24/16 09:59:57  31.7Vb  23∞C  Port 99
10/24/16 09:59:58  31.7Vb  23∞C  Port 99
10/24/16 09:59:59  31.7Vb  23∞C  Port 99
10/24/16 10:00:00  31.7Vb  23∞C  Port 99
10/24/16 10:00:01  31.7Vb  23∞C  Port 99
```

*Figure 5-3: Diagnostics*

### Battery Warnings

- Low battery voltage triggers warning messages during the exit from Diagnostics. If the main battery pack falls below 28 V, a message displays to replace the battery before deployment.
- If the main battery pack falls below 18 V, the Diagnostics program terminates and displays the message below before returning to the Main Menu.
- If a critically low battery is detected and a data file exists in memory that has not been offloaded, an additional warning displays reminding the user to offload data.

## <3> Manual Operations

The Manual Operations menu allows you to operate the different peripherals such as the valve and pump installed on your PPS. The manual operations available in this menu will vary depending on the system configuration.

- **Manual Valve Operations**: Options 1 – 4 of the PPS Manual Operation Menu move the 25 Port Valve to the specified positions.
- **Manual Pumping Operations**: Options 5 – 7 of the PPS Manual Operation Menu allows the user to perform manual pumping operations based on predefined, or user-defined pumping parameters. The pump can be stopped at any time by pressing [CTRL]-[C]. Forward and reverse directions pump 500mL of water at 75ml/min.
- **Manual Fixative Valve Operation**: If the PPS has a Fixative Valve installed, Option 8 of the PPS Manual Operation Menu switches between the OFF (Water sample) and ON (Fixative) positions.

```
_____________________________________________________________
Configuration: WTS-125M-SV              CF2 V2_05 of May  9 2016

                _____________________________
                        Manual Operation
                _____________________________
                    Mon Oct 24 10:00:04 2016

                              Port 99

          <1> Find port : home
          <2> Find port : J
          <3> Next port : advance
          <4> Next port : retreat
          <5> Run pump  : forward (250 ml @ 100 ml/min)
          <6> Run pump  : reverse (250 ml @ 100 ml/min)
          <7> Run pump  : programmable
          <8> Fixative Valve: OFF

          <M> Main Menu
```

*Figure 5-4: Manual Operation Menu*

Do not run the pump dry. If conducting a bench test, submerge the PPS intake and exhaust lines in water.

## <4> Sleep

The PPS automatically enters Sleep mode if left idle for 20 minutes to suspend the drain of battery power. You can also put the PPS in Suspend mode indefinitely by selecting the <4> Sleep option of the Main Menu. Prior to Suspend mode, the current time will display. During Suspend mode, the system will wake every 20 minutes to check system status, display the time and then return to Suspend mode. To wake the system and return to the Main Menu, hold down [CTRL]-[C] until the system wakes up.

```
          Selection [] ? 4

10/24/16 10:10:51 Suspended ...
```

*Figure 5-5: Suspend/Sleep Mode*

## <5> Create Schedule

The Create Schedule menu option allows users to define a deployment schedule without deploying the system immediately after. Defining a deployment schedule is described in more detail in Chapter 6, "Deployment Preparation".

## <6> Deploy System

The Deploy System menu option will check that deployment schedule was defined. If a deployment schedule is not defined, it will prompt the user to define a schedule and deployment parameters. Once a schedule and deployment parameters have been defined the system will perform pre-deployment system checks, and put the sampler into low power sleep mode until the first programmed deployment event time. System deployment is described in more detail in Chapter 6, "Deployment Preparation".

## <7> Offload Data

The Offload Data menu option will print the data gathered during a deployment to the screen. Users can capture this data by setting up a capture file in McLaneTerm. Offloading data is described in more detail in Chapter 6, "Deployment Preparation".

## <8> Contacting McLane

This option displays McLane contact information and includes the software version and serial number of your instrument.

```
Selection [] ? 8

               McLane Research Laboratories, Inc.
                    Falmouth Technology Park
                121 Bernard E. Saint Jean Drive
               East Falmouth, MA 02536-4444  USA

                  Email: McLane@McLaneLabs.com
                 Web: http://www.McLaneLabs.com
              Tel: 508-495-4000  Fax: 508-495-3333

                   Configuration: PPS-125M500
                    Source file: CF2-3_03.c
                  Electronics S/N: ML12345-02
                  Compiled: Aug  4 2014 13:07

 Press any key to continue.
```

*Figure 5-6: McLane Contact Information*

## Configuration Menu

The Configuration Menu allows the user to program which components are installed on the system. McLane properly configures the instrument before shipping. You may need to reconfigure the system if mechanical components are added or the system firmware is updated.

```
_____________________________________________________________

Configuration: WTS-250M                CF2 V2_05 of May  9 2016

                 ________________________________
                          Configuration
                 ________________________________

                     Mon Oct 24 09:59:05 2016

          <1>         50ml pump: No
          <2>        125ml pump: No
          <3>        250ml pump: Yes
          <M>       Maxon motor: Yes
          <P>     Pittman motor: No
          <S>    Fixative valve: No
          <A> Antifouling fluid: No

          <X> Save & Exit    <^C> Cancel & Exit
```

*Figure 5-7: Configuration Menu*

## Configuring the System

1. Enter “C” at the Main Menu.
2. When asked for a password, enter “*CON*”.
3. Use menu option 1 – 3 to select the system pump head capacity.
4. Use menu option M or P to select the pump motor manufacturer.
5. If a Fixative Valve is installed on the system, use menu option S to enable the Fixative Valve and program the fixative bag size. PPS systems with the Fixative Valve option installed are shipped with one 2 liter fixative reservoir bag and one 2 liter exhaust collection bag installed in the fixative box. The system allows users to program bag sizes of up to 5 liters.

PPS systems with the Fixative Valve option installed are shipped with one 2 liter fixative reservoir bag and one 2 liter exhaust collection bag installed in the fixative box. The system allows users to program bag sizes of up to 5 liters. If different bag sizes are used, the intake and exhaust bags must be the same size.

6. If the optional Antifouling Fluid Reservoir is installed on the PPS, use menu option A to configure the system to have Antifouling Fluid.
7. Save and exit using Configuration Menu option <X>.

## Notes

# Chapter 6
# Deployment Preparation

Topics covered:

- Closing and sealing the controller housing
- Priming the PPS filter holders and plumbing.
- Installing the water flush filter.
- Preparing the optional fixative valve for a deployment.
- Preparing the optional antifouling flush reservoir.
- Programming deployment parameters
- Starting a deployment.

## Closing and Sealing the Controller Housing

Before priming, the controller housing end cap should be closed and sealed. Always inspect o-rings for signs of wear and the presence of any foreign material (which can cause leaks). Look for small cracks and feel for grit, sand, or hair. Clean o-rings with alcohol and lubricate with a thin coating of o-ring grease as necessary.

See Chapter 2, "System Description", for details about the end cap and o-rings. Position the larger o-ring in the axial groove to seal against the face end of the pressure housing. Fit the smaller o-ring and the backup ring in the radial groove. Position the backup ring on the low pressure side of the radial groove (toward the interior of the controller housing). The backup ring concave side faces toward the round o-ring. The accompanying o-ring is seated on the concave side (high pressure side) of the backup ring.

### Checking the Zinc Anodes

Inspect, and if necessary, replace the zinc anodes attached to the controller housing top and bottom end caps. When installing new zinc anodes, use 316 stainless steel hardware and include the o-ring. Spare zincs can be ordered from McLane.

## Priming the PPS

The ultimate goal of the priming procedure is to clear all fluid lines and valve ports of trapped air. This is a wet process and should be completed by two people. These required tools are included in the tool kit:

- 7/16 hand driver (to open and close the enclosure)
- Hose-A
- Hose-B
- Hose-C
- Hose-G
- Luer lock water syringe
- Water container filled with neutral water.
    1. Follow the steps in the Getting Started chapter of this User Manual to establish communications with the PPS.
    2. Close and seal the controller housing.
    3. From the Manual Operation Menu select option <1> to align the 25 port valve to the home port.

    Check option 8 of the Manual Operations Menu to make sure the Fixative Valve is OFF (the water position).

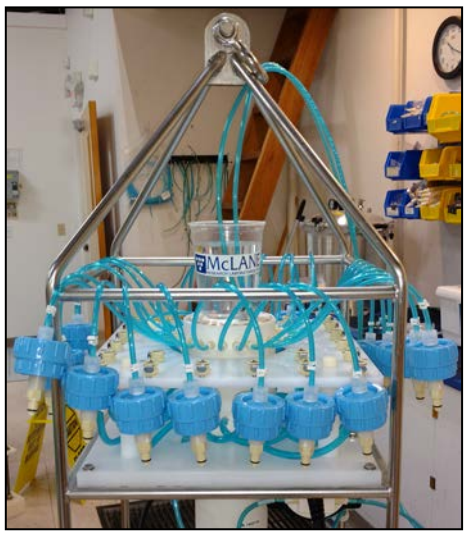


*Figure 6-1:Priming Setup*

5. Disconnect all of the filter bodies from the filter base plate, but keep the tops of the filter bodies connected to the 25 port valve.
6. Place a container of neutral water on top of the 25 port valve.
7. Connect Hose-A to the common intake on the 25 port valve. If the fixative valve is installed, connect Hose-A to the water intake port of the fixative valve instead. Place the opposite end of Hose-A in the water container.
8. Connect Hose-B to the exhaust port of the micro-pump. If the fixative valve is installed, connect Hose-B to the exhaust port of the fixative valve instead. Place the opposite end of Hose-B in the water container.
9. Connect Hose-C to the syringe, fill the syringe with water, and remove air from the syringe.

10. Select option 3 of the Manual Operation Menu to advance to the next port (Port 1).
11. Open filter holder 1 by twisting the top half from the bottom half, and connect the bottom half of the filter to Hose-C which is connected to the syringe.

*Figure 6-2: Open Filter Holder 1*

12. Use the syringe to inject water through the bottom half of the filter holder until all air is removed and water pools on the top.

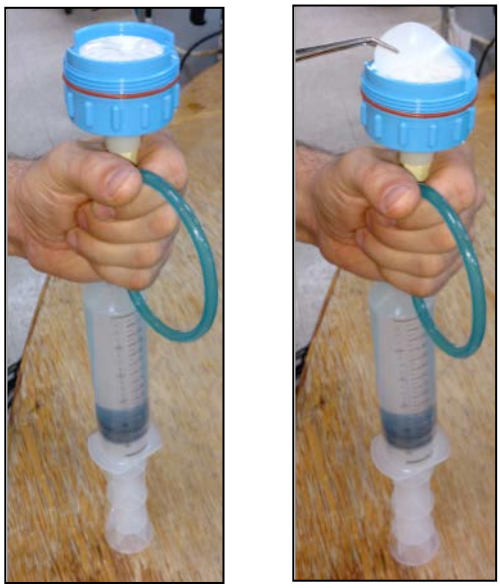

*Figure 6-3: Injecting Water with Syringe*

13. Place a filter on the bottom half of the filter holder and allow it to soak up the pool of water. Continue to slowly inject water if the filter requires more to become completely saturated.

14. Reattach the bottom half to the top half of the filter body. The top filter ring of the filter holder must be fully engaged and tightened down to the filter holder body. To avoid introducing air back into the purged bottom half of the filter body, the syringe can be used to inject water very slowly while attaching the top and bottom halves.

*Figure 6-4: Reattaching Top and Bottom of Filter*

15. Once the two halves of the filter body are connected, slowly inject the remaining contents of the syringe through the filter body to remove all air from the remaining plumbing. Lightly tapping the filter against the PPS frame while doing this will remove any trapped air. As water is injected, air bubbles should appear in the water container.

16. Continue injecting until air bubbles stop, the syringe may need to be refilled during this process.

The filter body has a valved connection and will seal immediately when disconnected quickly. This seal will protect from introducing air while refilling the syringe. Remember to remove all air from the syringe before reconnecting the syringe to the filter body.

17. When all air has been purged from the filter position plumbing, disconnect the syringe from the filter body.

18. Connect Hose-G to port 1 on the filter base plate, and place the other side of the hose in the water container.

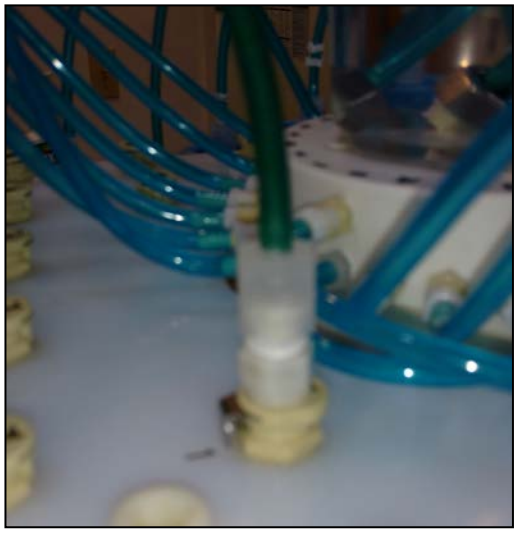

*Figure 6-5: Connecting Hose-G*

19. Select option 6 of the Manual Operation Menu to pump 500 ml of water at 125 ml/minute in reverse [R]. While the system pumps in reverse, air is pushed from the plumbing into the water container. Once all air has been removed from the filter position plumbing, cancel the pumping operation with [CTRL]-[C].

While pumping air, bubbles can become trapped in the bends of the tubing below the base plate. These air bubbles should be helped out of the tubing by gently tilting the hose upward to let the bubble to travel through the tube.

20. Select option 3 of the Manual Operation Menu to advance to the next port.

21. Disconnect Hose-G and reattach the filter body to port 1 of the filter base plate.

22. Repeat steps 12 – 22 for all filter positions.

23. Once priming is complete, disconnect Hose-A and Hose-B from the Fixative Valve, remove the water container from the top of the 25 Port Valve and move on to the next step, Installing the Water Flush Filter.

24. Once all of the sample positions have been primed, return the valve to the home port using Manual Operations menu option <1>.

## Preparing the Fixative Valve for a Deployment

**Consider the following when determining the total amount of fixative for a deployment:**

- Chemical Compatibility: The PPS and Fixative Valve are compatible with most fixative solutions. Before deploying the PPS with the Fixative Valve option, confirm fixative concentrations by running tests to determine sufficient fixative for your specific needs. Contact mclane@mclanelabs.com for questions about compatibility.
- The PPS with Fixative option includes 2000 ml bags. Contact mclane@mclanelabs.com for information about using bags of a different size.
- A Fixative Flush of 4x the internal volume of the filter holder should be sufficient for a fixative that requires a high end concentration.
- The internal volume of each PPS filter holder and tubing is approximately 22 ml.
- The maximum allowable fixative flush volume for a single event is 95% of the available fixative volume divided by the number of events in the deployment.

**Total Required Fixative = (Fixative Flush volume * number of events) + (1.05 * Fixative Reservoir Bag size)**

Follow the recommended chemical safety precautions for the Fixative being used.

### Priming the Fixative Valve Plumbing

Required tools:

- 7/16 hand driver (to open and close the controller housing)
- Hose-A
- Hose-B
- Hose-E
- Hose-F
- Luer lock water syringe
- Water container filled with neutral water.

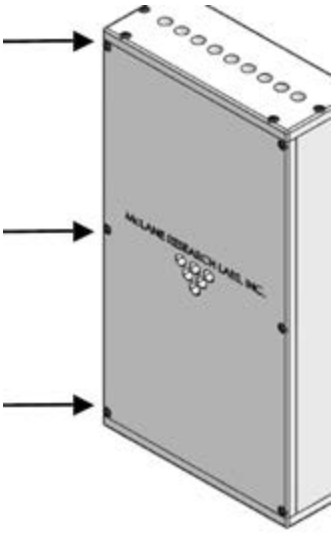

*Figure 6-6: Fixative Box*

1. Open the Fixative Box by removing the six nylon ¼-20 fasteners on the cover of the box.
2. Remove the fixative bag and fixative exhaust collection bag from the fixative box.
3. Place a container of water on the floor near the PPS.
4. Select option <8> of the Manual Operation Menu to toggle the Fixative Valve to the ON (fixative) position.
5. Check the 25 Port Valve position indicator in the Manual Operation Menu to ensure it is aligned to port 0.
6. Connect Hose-A to the Fixative Exhaust-1 Hose inside of the Fixative Box, and place the other end in the water container. Use the nut attached to the hose as a weight to keep it submerged in the water container.
7. Connect Hose-E to the Fixative Syringe, and fill the syringe with Fixative.
8. Connect the Fixative Syringe and Hose-E to Fixative Intake-2 Hose inside the Fixative Box.

Use the Fixative Syringe to SLOWLY inject fixative through the fixative plumbing. This will cause air to exit Hose-A into the water container. If it is not very easy to push water through the fixative plumbing, stop and check the Manual Operation Menu to make sure that the Fixative is in the ON position, and the 25 Port Valve is aligned to port 0.

9. When the air bubbles have stopped, select option 8 of the Manual Operation Menu to switch the Fixative Valve to the OFF (Water) position. This will seal the fixative plumbing, and keep air out.
10. Disconnect Hose-A, and the Fixative Syringe from the fixative intake and exhaust plumbing.
11. Empty any remaining fixative out of the syringe and Hose-A.
12. Connect Hose-A to the water intake port of the fixative valve.
13. Connect Hose-B to the water exhaust port of the fixative valve.
14. Make sure the fixative valve is in the OFF position.
15. Use Manual Operations menu option <7> to pump 100 ml forward at 100 ml / minute to flush fixative from the common plumbing.
16. Disconnect Hose-A and Hose-B.

## Filling the Fixative Bags

1. Weigh the Fixative Intake Bag, and make a note of the weight.
2. Locate the Fixative Syringe, Hose-F, and the quick disconnect plugs in the toolkit.
3. Fill a container with fixative, place it on a surface with the fixative bags.
4. Connect the Fixative Syringe to Hose-F, and fill the syringe with fixative.
5. Inject the contents of the syringe into Fixative Intake Bag. Repeat this process until the amount of fixative required by the deployment is added to the Fixative Intake Bag.

*Figure 6-7: Inject Syringe Contents into Fixative Bag*

6. When filling is complete, remove Hose-F from the syringe, while leaving Hose-F attached to the Fixative Intake Bag.

7. Place the free end of Hose-F into the fixative container using the nut attached to the hose as a weight to keep the hose submerged.

*Figure 6-8: Place Hose-F into Fixative Container*

8. Squeeze the air out of the fixative intake bag, through the hose, into the container.

9. After air is removed, seal the Fixative Intake Bag by folding the end of the hose and pinching it shut. Disconnect Hose-F from the Fixative Intake Bag, and connect the quick disconnect plug.

*Figure 6-9: Pinch Fixative Bag Hose, Attach to Intake-2 Hose*

10. Weigh the Fixative Intake Bag and make a note of the weight. Subtract the filled bag weight from the empty bag weight to determine the total amount of fixative added.

11. Pinch the Fixative Intake Bag hose, disconnect the plug, while continuing to pinch the hose, attach the bag to the Fixative Intake-2 hose inside of the Fixative Box. If done correctly no air should have been introduced.

## Filling the Fixative Exhaust Collection Bag

It is important to fill the collection bag with a volume of water equal to 5% of the bag's rated capacity. Without this water a differential pressure could build across Fixative Valve O-ring seals at ocean depths, potentially damaging the fixative valve.

1. Locate the Fixative Syringe, Hose-E, a water container, and the quick disconnect plugs in the toolkit.
2. Connect Hose-E to the Fixative Syringe.
3. Fill the syringe with neutral water. This is the exhaust bag, and shouldn't require fixative.
4. Inject approximately 5% of the Fixative Exhaust Bag's capacity into the bag.
5. When filling is complete, remove Hose-E from the syringe while leaving it attached to the Fixative Exhaust bag.
6. Place the free end of Hose-E into the container using the nut attached to the hose as a weight to keep the hose submerged.
7. Roll up the Fixative Exhaust Bag to force air from it into the water container.

*Figure 6-10: Roll Fixative Bag to Release Air*

8. Pinch the end of the Fixative Exhaust Bag hose, disconnect Hose-E. While continuing to pinch the hose, attach the bag to the Fixative Exhaust-1 hose inside of the Fixative Box. If done correctly no air should have been introduced.

9. Attach the Fixative Intake Bag and Fixative Exhaust Bag to the fixative box using the nylon ¼ -20 fasteners. Keep the hose connections facing downward, and the Fixative Exhaust bag in front of the Fixative Intake bag.

## Installing the Water Flush Filter

The water flush filter installed in-line to Home Port (port 0) accepts a 25mm filter with a pore size from 5 to 10 microns. The filter protects the pump head from damage by large particles when the water flush clears the fluid lines between samples.

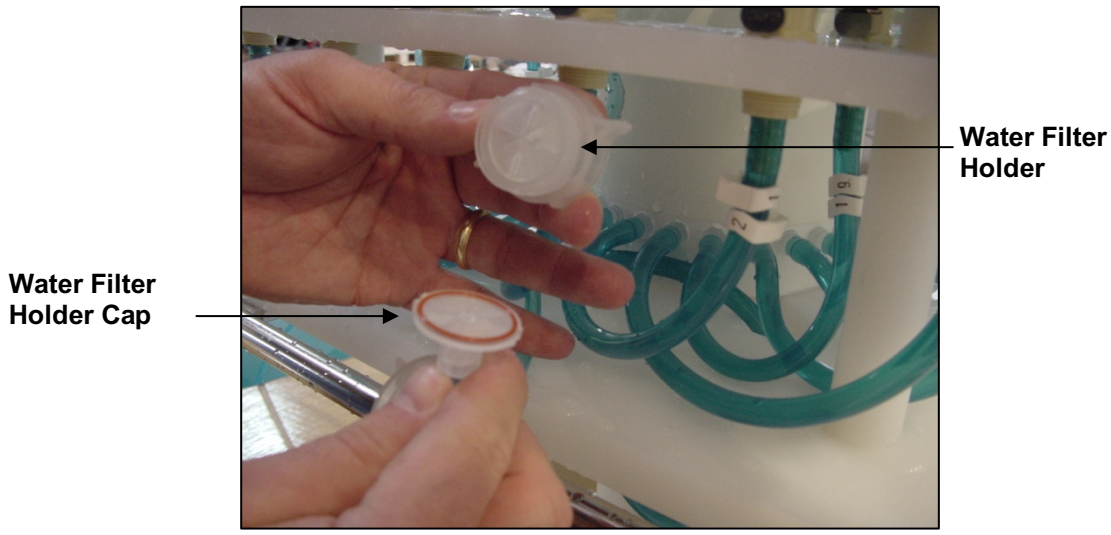


*Figure 6-11: Disassembling Water Flush Filter*

**Required tools:**

- Hose-A
- Hose-B
- Hose-E
- Luer lock water syringe
- Water container filled with neutral water.
- 5-10 micron 25 mm filter

1. From the Manual Operation Menu select option <1> to align the 25 port valve to the home port.
2. Check option 8 of the Manual Operations Menu to make sure the Fixative Valve is OFF (the water position).
3. Connect Hose-E to the syringe, fill the syringe with water, and remove any air from the syringe.
4. Connect Hose-A to the common intake on the 25 port valve. If the fixative valve is installed, connect Hose-A to the water intake port of the fixative valve instead. Connect the other end to Hose-E and the syringe.
5. Connect Hose-B to the exhaust port of the micro-pump. If the fixative valve is installed, connect Hose-B to the water intake port of the fixative valve instead. Place the opposite end of Hose-B in the water container.
6. Find the 25 mm home port flush filter holder, install a 25 mm filter.
7. Slowly inject with the syringe until air bubble stop coming out of Hose-A.

## Preparing Antifouling Reservoir for a Deployment

If this is the last time the PPS pump and valve are used, there will be antifouling solution in the common plumbing until the next event.

**Required tools:**

- 7/16 hand driver (to open and close the enclosure)
- Hose-A
- Hose-B
- Hose-E
- Hose-F
- Luer lock water syringe
- Water container filled with neutral water.

1. Use Manual Operation Menu Option <1> to align the 25 port valve to the home port.
2. Attach Hose-A to Water Intake port of the fixative valve.
3. Attach Hose-B to Water Exhaust port of fixative valve.
4. Put the opposite ends of both Hose-A and Hose-B in a container full of water placed on top of the 25 port valve.
5. Detach the Antifoul-1 hose from the port 24 filter position quick disconnect on the filter baseplate.
6. Attach Hose-C to the Antifoul-1 hose and place the opposite end of Hose-C in the water container.

*Figure 6-12: Attaching Hose-E*

7. Attach Hose-E to the Water Syringe.
8. Detach Antifoul-2 Hose from the luer lock fitting on the tube cap.
9. Remove the Antifouling Tube Cap and the connected bag from the Tube.
10. Attach Hose-F to the tube cap.
11. Attach the syringe to the tube cap by connecting Hose-E and Hose-F together.
12. Use the syringe to remove air and or fluid from the antifouling bag.
13. Pinch Hose-F using the small piece of black tubing included in the toolkit to prevent air from entering back into the bag.

*Figure 6-13: Fill Antifouling Tube*

14. Disconnect Hose-E from Hose-F and fill the syringe with 140 ml of cleaning solution.
15. Fill the antifouling tube to the brim with water.
16. Insert the bag into the tube and secure the cap.
17. Connect the syringe of cleaning solution to the antifouling bag by reconnecting Hose-E and Hose-F.
18. Remove the small piece of black tubing used to pinch Hose-F.
19. Slowly inject the cleaning solution into the antifouling bag with the syringe. This will fill the bag, which will displace water from the tube and out Antifoul-1 hose, through Hose-C, into the water container.
20. Repeat steps 13-19 until six syringes (840 ml) of cleaning solution have been injected into the antifouling bag. Make sure to inject the final 140 ml slowly.
21. Reconnect the Antifoul-1 hose back to the filter 24 position on the filter baseplate.
22. Reconnect the Antifoul-2 hose back to the tube cap luer lock connector.
23. Use Manual Operation Menu option 2 to align the 25 port valve to port 24.

24. Use Manual Operation Menu option 7 to pump 40 ml of cleaning solution at 100 ml / minute. This will prime the antifouling plumbing with cleaning solution.

25. If these instructions were followed, you should have 800 ml of antifouling solution after pumping 40 ml. Remember this, because you will need to know how much cleaning solution there is during deployment setup.

## Programming Deployment Parameters

After the system has been inspected and primed, the next step in preparing for a deployment is programming the Deployment Parameters. Follow the steps in this section to program the PPS Deployment Parameters.

## Program a Deployment Schedule

1. Establish communications with the PPS, and start a capture file named "DEPLOYMENT_PREP_[DATE_AND_TIME]".
2. Select Main menu option <5> to create a schedule. There will be system warnings if there are previous deployment records in memory, if the system hasn't been rebooted since the last deployment event completed, or if battery voltages have dropped below the system warning voltage. Dealing with these warnings should be self-explanatory, just follow the prompts.
3. Confirm that the system clock is correct (McLane firmware uses a 0-24 military time convention).
4. Enter the number of events in the deployment.
5. At the Schedule Menu, deployment event times can be programmed individually, at a set interval, or by defining a deployment start and stop time.

```
Configuration: WTS-125M-SV              CF2 V2_05 of May  9 2016

                    Schedule Menu

                 Wed Dec  7 16:51:31 2016

                 <1> Enter each event time
                 <2> Enter start date & interval
                 <3> Enter start date & end date

                 <M> Main menu

                 Selection [2] ? 2

Enter START date and time [12/07/2016 16:51:34] ? 12/10/16 01:00:00

Enter interval

Days     (0-365) [  0] ? 1
Hours    (0- 23) [  0] ? 0
Minutes  (0- 59) [  0] ? 0
```

*Figure 6-14: Schedule Menu*

**Schedule menu options:**

**<1> Enter each event time:** This option allows the user to enter event start times individually (month, day, year, hour, minute, and second). The events do not have to be entered in chronological order and will be automatically sorted.

**<2> Enter start date & interval:** This option allows the user to enter a start date and a desired interval between the event start times. The interval is entered in units of days, hours and minutes.

**<3> Enter start date & end date**: This option allows the user to enter a start and end date, and the system automatically calculates the intervals between events.

Scheduling properly accounts for leap years.

6. After defining a schedule, individual event times can be modified later in the deployment programming process.

## Programming Event Parameters

Immediately after defining a schedule the user must define global event parameters for the deployment. The parameters defined at this point will be applied to all events in the deployment. After the global event parameters are defined the user has the opportunity to modify individual event parameters later on in the deployment programming process. Depending on the optional features installed on the PPS, different procedures will be available for programming. Programming event parameters should be fairly self-explanatory, refer to the Deployment Event Description for details on each procedure.

```
                    Event Parameters


Header      A| Header 1 Example
            B| Header 2 Example
            C| Header 3 Example

Water       D| Flushing volume              =    120 [ml]
Flush        | Flushing time limit          =      4 [min]

Sample      E| Sample volume                =   5000 [ml]
            F| Pumping flow rate            =    110 [ml/min]
            G| Minimum flow rate            =     50 [ml/min]
            H| Pumping time limit           =    101 [min]

Data        I| Sample pump data period      =      1 [min]

Fixative    J| Disabled
Flush       K| Total fixative volume        =      0 [ml]
            L| Fixative flush volume        =      0 [ml]
            M| Pumping flow rate            =      0 [ml/min]
            N| Minimum flow rate            =      0 [ml/min]
            O| Pumping time limit           =      0 [min]

Antifouling P| Disabled
Flush       Q| Total antifouling available  =      0 [ml]
            R| Antifouling volume           =      0 [ml]
            S| Pumping flow rate            =      0 [ml/min]
            T| Minimum flow rate            =      0 [ml/min]
            U| Pumping time limit           =      0 [min]

            V| Verify and continue.
```

*Figure 6-15: Event Parameters*

## Sample Pump Data Period

While pumping a sample the PPS logs pumping diagnostic data to memory at a set interval. This interval is defaulted to one minute, and can be programmed using Event Parameter menu option <I>.

## Fixative Flush Programming

If a fixative valve is installed on the PPS an option for a fixative flush will be displayed in the Event Parameters menu. The Fixative Flush is disabled by default, use Event Parameters menu option <J> to enable the fixative flush.

Immediately after enabling the fixative flush the system will ask you to program the available fixative volume. The last known total fixative volume is displayed, and the user has the opportunity to update the volume. Once the total fixative volume is confirmed the user can assign fixative flush pumping parameters. These fixative flush parameters will be applied to every event in the deployment, but the user will have the opportunity to change fixative flush parameters for individual events later in the deployment programming process.

```
                    Event Parameters


Header       A| Header 1 Example
             B| Header 2 Example
             C| Header 3 Example

Water        D| Flushing volume              =    120 [ml]
Flush         | Flushing time limit          =      4 [min]

Sample       E| Sample volume                =   5000 [ml]
             F| Pumping flow rate            =    110 [ml/min]
             G| Minimum flow rate            =     51 [ml/min]
             H| Pumping time limit           =     99 [min]

Data         I| Sample pump data period      =      1 [min]

Fixative     J| Disabled
Flush        K| Total fixative volume        =      0 [ml]
             L| Fixative flush volume        =      0 [ml]
             M| Pumping flow rate            =      0 [ml/min]
             N| Minimum flow rate            =      0 [ml/min]
             O| Pumping time limit           =      0 [min]

Antifouling  P| Disabled
Flush        Q| Total antifouling available  =      0 [ml]
             R| Antifouling volume           =      0 [ml]
             S| Pumping flow rate            =      0 [ml/min]
             T| Minimum flow rate            =      0 [ml/min]
             U| Pumping time limit           =      0 [min]

             V| Verify and continue.

             Selection [] ? j

Enable fixative flush [Y] ? y

Total fixative available:  868.0
Is this correct? [Y] ? N
Enter the available fixative volume (ml) (0.0 to 5000.0) [868.0] ? 2000
```

*Figure 6-16: Enable Fixative Flush*

## Program Optional Antifouling Flush

If an antifouling reservoir is installed on the PPS an option for an antifouling flush will be displayed in the Event Parameters menu. The antifouling flush is disabled by default, use Event Parameters menu option <P> to enable the fixative flush.

```
____________________________________________________

                 Event Parameters
____________________________________________________


 Header      A| Header 1 Example
             B| Header 2 Example
             C| Header 3 Example

 Water       D| Flushing volume              =    120 [ml]
 Flush        | Flushing time limit          =      4 [min]

 Sample      E| Sample volume                =   5000 [ml]
             F| Pumping flow rate            =    110 [ml/min]
             G| Minimum flow rate            =     51 [ml/min]
             H| Pumping time limit           =     99 [min]

 Data        I| Sample pump data period      =      1 [min]

 Fixative    J| Enabled
 Flush       K| Total fixative volume        =   2000 [ml]
             L| Fixative flush volume        =     70 [ml]
             M| Pumping flow rate            =     75 [ml/min]
             N| Minimum flow rate            =     45 [ml/min]
             O| Pumping time limit           =      2 [min]

 Antifouling P| Disabled
 Flush       Q| Total antifouling available  =      0 [ml]
             R| Antifouling volume           =      0 [ml]
             S| Pumping flow rate            =      0 [ml/min]
             T| Minimum flow rate            =      0 [ml/min]
             U| Pumping time limit           =      0 [min]

             V| Verify and continue.

             Selection [] ? P

 Enable antifouling flush [Y] ?

Total antifouling fluid available:   41.0
Is this correct? [Y] ? N
Enter the available antifouling fluid volume (ml) (0.0 to 1000.0) [41.0] ? 800
```

*Figure 6-17: Enable Antifouling Flush*

Immediately after enabling the antifouling flush the system will ask you to program the total available antifouling solution volume. The last known total antifouling solution volume is displayed, and the user has the opportunity to update the volume. Once the total antifouling solution volume is confirmed the user can assign antifouling flush pumping parameters. These antifouling flush parameters will be applied to every event in the deployment, but the user will have the opportunity to change antifouling flush parameters for individual events later in the deployment programming process.

## Verifying Deployment Parameters and Modifying Individual Events

After a schedule and global event parameters have been defined for a deployment, the start times and parameters for each event are printed to the screen. The system analyzes the deployment parameters and will prompt the user with a warning if the estimated time to complete an event could possibly overlap into the scheduled time of another event. At this point the user has the opportunity to edit individual event parameters.

To modify individual event parameters:

1. When asked to modify an event at the Schedule Verification, answer yes and specify an event number when prompted to do so.

```
Schedule Verification

                            |Flush  Time   |Sample Flow  Min   Time   |Fixative Flow  Min   Time   |Antifoul Flow  Min   Time
                            |Vol    Limit  |Vol    Rate  Rate  Limit  |Vol      Rate  Rate  Limit  |Vol      Rate  Rate  Limit

Event  1: 08/30/17 12:00:00 |120    4      |5000   110   51    99     |70       75    45    2      |30       100   50    1
Event  2: 08/31/17 12:04:00 |120    4      |5000   110   51    99     |70       75    45    2      |30       100   50    1
Event  3: 09/01/17 12:08:00 |120    4      |5000   110   51    99     |70       75    45    2      |30       100   50    1
Event  4: 09/02/17 12:12:00 |120    4      |5000   110   51    99     |70       75    45    2      |30       100   50    1
Event  5: 09/03/17 12:16:00 |120    4      |5000   110   51    99     |70       75    45    2      |30       100   50    1
Event  6: 09/04/17 12:20:00 |120    4      |5000   110   51    99     |70       75    45    2      |30       100   50    1
Event  7: 09/05/17 12:24:00 |120    4      |5000   110   51    99     |70       75    45    2      |30       100   50    1
Event  8: 09/06/17 12:28:00 |120    4      |5000   110   51    99     |70       75    45    2      |30       100   50    1
Event  9: 09/07/17 12:32:00 |120    4      |5000   110   51    99     |70       75    45    2      |30       100   50    1
Event 10: 09/08/17 12:36:00 |120    4      |5000   110   51    99     |70       75    45    2      |30       100   50    1
Event 11: 09/09/17 12:40:00 |120    4      |5000   110   51    99     |70       75    45    2      |30       100   50    1
Event 12: 09/10/17 12:44:00 |120    4      |5000   110   51    99     |70       75    45    2      |30       100   50    1
Event 13: 09/11/17 12:48:00 |120    4      |5000   110   51    99     |70       75    45    2      |30       100   50    1
Event 14: 09/12/17 12:52:00 |120    4      |5000   110   51    99     |70       75    45    2      |30       100   50    1
Event 15: 09/13/17 12:56:00 |120    4      |5000   110   51    99     |70       75    45    2      |30       100   50    1
Event 16: 09/14/17 13:00:00 |120    4      |5000   110   51    99     |70       75    45    2      |30       100   50    1
Event 17: 09/15/17 13:04:00 |120    4      |5000   110   51    99     |70       75    45    2      |30       100   50    1
Event 18: 09/16/17 13:08:00 |120    4      |5000   110   51    99     |70       75    45    2      |30       100   50    1
Event 19: 09/17/17 13:12:00 |120    4      |5000   110   51    99     |70       75    45    2      |30       100   50    1
Event 20: 09/18/17 13:16:00 |120    4      |5000   110   51    99     |70       75    45    2      |30       100   50    1
Event 21: 09/19/17 13:20:00 |120    4      |5000   110   51    99     |70       75    45    2      |30       100   50    1
Event 22: 09/20/17 13:24:00 |120    4      |5000   110   51    99     |70       75    45    2      |30       100   50    1
Event 23: 09/21/17 13:28:00 |120    4      |5000   110   51    99     |70       75    45    2      |30       100   50    1

Pump data period: 1 minute
Modify an event [N] ? Y

Enter the event number (1-23) [1] ? 1
```

*Figure 6-18: Schedule Verification*

2. After changing parameters for the specified event, enter menu option <V> to verify the new deployment event parameters.

```
                    Event 1 Parameters


Header      A| Header 1 Example
            B| Header 2 Example
            C| Header 3 Example

Water       D| Flushing volume              =     50 [ml]
Flush        | Flushing time limit          =      2 [min]

Sample      E| Sample volume                =   1000 [ml]
            F| Pumping flow rate            =    110 [ml/min]
            G| Minimum flow rate            =     51 [ml/min]
            H| Pumping time limit           =     20 [min]

Data        I| Sample pump data period      =      1 [min]

Fixative    J| Enabled
Flush       K| Total fixative volume        =   2000 [ml]
            L| Fixative flush volume        =     50 [ml]
            M| Pumping flow rate            =     75 [ml/min]
            N| Minimum flow rate            =     45 [ml/min]
            O| Pumping time limit           =      2 [min]

Antifouling P| Enabled
Flush       Q| Total antifouling available  =    800 [ml]
            R| Antifouling volume           =     28 [ml]
            S| Pumping flow rate            =    100 [ml/min]
            T| Minimum flow rate            =     50 [ml/min]
            U| Pumping time limit           =      1 [min]

            V| Verify and continue.

            Selection [] ? v
```

*Figure 6-19: Changing Event Parameters*

Make sure the changes were made to the event parameters when the schedule verification is printed to the screen.

Schedule Verification

| | Flush Vol | Time Limit | Sample Vol | Flow Rate | Min Rate | Time Limit | Fixative Vol | Flow Rate | Min Rate | Time Limit | Antifoul Vol | Flow Rate | Min Rate | Time Limit |
|---|---|---|---|---|---|---|---|---|---|---|---|---|---|---|
| Event 1: 08/30/17 12:00:00 | 50 | 2 | 1000 | 110 | 51 | 20 | 50 | 75 | 45 | 2 | 28 | 100 | 50 | 1 |
| Event 2: 08/31/17 12:04:00 | 120 | 4 | 5000 | 110 | 51 | 99 | 70 | 75 | 45 | 2 | 30 | 100 | 50 | 1 |
| Event 3: 09/01/17 12:08:00 | 120 | 4 | 5000 | 110 | 51 | 99 | 70 | 75 | 45 | 2 | 30 | 100 | 50 | 1 |
| Event 4: 09/02/17 12:12:00 | 120 | 4 | 5000 | 110 | 51 | 99 | 70 | 75 | 45 | 2 | 30 | 100 | 50 | 1 |
| Event 5: 09/03/17 12:16:00 | 120 | 4 | 5000 | 110 | 51 | 99 | 70 | 75 | 45 | 2 | 30 | 100 | 50 | 1 |
| Event 6: 09/04/17 12:20:00 | 120 | 4 | 5000 | 110 | 51 | 99 | 70 | 75 | 45 | 2 | 30 | 100 | 50 | 1 |
| Event 7: 09/05/17 12:24:00 | 120 | 4 | 5000 | 110 | 51 | 99 | 70 | 75 | 45 | 2 | 30 | 100 | 50 | 1 |
| Event 8: 09/06/17 12:28:00 | 120 | 4 | 5000 | 110 | 51 | 99 | 70 | 75 | 45 | 2 | 30 | 100 | 50 | 1 |
| Event 9: 09/07/17 12:32:00 | 120 | 4 | 5000 | 110 | 51 | 99 | 70 | 75 | 45 | 2 | 30 | 100 | 50 | 1 |
| Event 10: 09/08/17 12:36:00 | 120 | 4 | 5000 | 110 | 51 | 99 | 70 | 75 | 45 | 2 | 30 | 100 | 50 | 1 |
| Event 11: 09/09/17 12:40:00 | 120 | 4 | 5000 | 110 | 51 | 99 | 70 | 75 | 45 | 2 | 30 | 100 | 50 | 1 |
| Event 12: 09/10/17 12:44:00 | 120 | 4 | 5000 | 110 | 51 | 99 | 70 | 75 | 45 | 2 | 30 | 100 | 50 | 1 |
| Event 13: 09/11/17 12:48:00 | 120 | 4 | 5000 | 110 | 51 | 99 | 70 | 75 | 45 | 2 | 30 | 100 | 50 | 1 |
| Event 14: 09/12/17 12:52:00 | 120 | 4 | 5000 | 110 | 51 | 99 | 70 | 75 | 45 | 2 | 30 | 100 | 50 | 1 |
| Event 15: 09/13/17 12:56:00 | 120 | 4 | 5000 | 110 | 51 | 99 | 70 | 75 | 45 | 2 | 30 | 100 | 50 | 1 |
| Event 16: 09/14/17 13:00:00 | 120 | 4 | 5000 | 110 | 51 | 99 | 70 | 75 | 45 | 2 | 30 | 100 | 50 | 1 |
| Event 17: 09/15/17 13:04:00 | 120 | 4 | 5000 | 110 | 51 | 99 | 70 | 75 | 45 | 2 | 30 | 100 | 50 | 1 |
| Event 18: 09/16/17 13:08:00 | 120 | 4 | 5000 | 110 | 51 | 99 | 70 | 75 | 45 | 2 | 30 | 100 | 50 | 1 |
| Event 19: 09/17/17 13:12:00 | 120 | 4 | 5000 | 110 | 51 | 99 | 70 | 75 | 45 | 2 | 30 | 100 | 50 | 1 |
| Event 20: 09/18/17 13:16:00 | 120 | 4 | 5000 | 110 | 51 | 99 | 70 | 75 | 45 | 2 | 30 | 100 | 50 | 1 |
| Event 21: 09/19/17 13:20:00 | 120 | 4 | 5000 | 110 | 51 | 99 | 70 | 75 | 45 | 2 | 30 | 100 | 50 | 1 |
| Event 22: 09/20/17 13:24:00 | 120 | 4 | 5000 | 110 | 51 | 99 | 70 | 75 | 45 | 2 | 30 | 100 | 50 | 1 |
| Event 23: 09/21/17 13:28:00 | 120 | 4 | 5000 | 110 | 51 | 99 | 70 | 75 | 45 | 2 | 30 | 100 | 50 | 1 |

Pump data period: 1 minute
Modify an event [N] ? n

*Figure 6-20: Schedule Verification*

3. When finished modifying individual event parameters, answer "N" to the "Modify an event?" prompt, and the system will return to the Main Menu.

4. At this point the system is prepared for a deployment and can be put to sleep until the time comes to deploy the system.

## Instrument Current Consumption

The PPS has a +36VDC, drop-in D-cell battery pack with a total capacity of 10,000 mAh. Battery capacity for a planned deployment can be estimated using the Instrument Current Consumption tables in this section. In addition to these typical current consumption numbers, battery drain is affected by flow rate, pump speed and types of filters used in the filter holders. Higher pump speeds and filters that have collected more material will draw additional battery capacity and can make battery endurance estimation more difficult. The PPS may also have a Dual Fixative Solenoid Valve for fixative (Intake) and collection (Exhaust) paths.

| **Instrument Current Consumption** | |
|---|---|
| Controller electronics ON | 9.0 mA |
| Controller electronics LOW POWER SLEEP | 0.22 mA |
| Moving Valve | 340 mA |
| Forward/Reverse Pumping | 160 mA |
| Pump Water Flush (@ 125 mL / min) | 180 mA |
| Fixative Solenoid Valve (ON) | 250 mA |
| Fixative Solenoid Valve (ON) and Pumping | 415 mA |

| **Instrument ON Consumption** | |
|---|---|
| Moving Valve (24 port deployment) | 0.451 h = 1,624 s |
| Moving Valve (single port advance) | 0.0022 h = 8 s |
| Pump Water Flush (100 mL @ 125 mL / min) | 0.0134 h = 48 s |
| Pump Sample (10 L @ 100 mL / min) | 1.667 h = 100 min |
| Fixative Flush (50 mL @ 100 mL / min) | 0.0084 h = 30 s |

| **System Deployment /Event Parameters for this example** | |
|---|---|
| Number of Events | 24 |
| Length of Deployment | 1-Year |
| Flushing Volume | 100 mL |
| Flushing Time Limit | 3 min |
| Sample Volume | 10,000 mL |
| Pumping Flow Rate | 100 mL / min |
| Minimum Flow Rate | 50 mL / min |

| System Deployment /Event Parameters for this example | |
|---|---|
| Pumping Time Limit | 41 min |
| Sample Pump Data Period | 1 min |
| Fixative Flush | Enabled |
| Total Fixative Volume | 1400 mL |
| Fixative Flush Volume | 50 mL |
| Pumping Flow Rate | 100 mL / min |
| Minimum Flow Rate | 50 mL / min |
| Pumping Time Limit | 2 min |

## Example of Estimating Battery Life for One Year Deployment

| **Pre-deployment (system prep)** | |
|---|---|
| Controller Electronics (ON) – 3 hours | 3 h x 9.0 mA = 27.0 mAh |
| Moving Valve (25 ports, single port advance) | 25 ports x 0.0022 h x 340 mA = 18.7 mAh |
| Pumping – 0.5 hours | 0.5 h x 160 mA = 80.0 mAh |
| | **Subtotal = 125.7 mAh** |
| **Deployment** | |
| Controller Electronics (Low Power Sleep) – 1 year | 8760 h x 0.22 mA = 1927.2 mAh |
| Moving Valve (24 port deployment) | 0.451 h x 340 mA = 153.4 mAh |
| Pump Water Flush (24 ports) | 24 ports x 0.0134 h x 180 mA = 57.9 mAh |
| Pump Sample (24 ports) | 24 ports x 1.667 h x 160 mA = 6401.3 mAh |
| Fixative Flush (24 ports) | 24 ports x 0.0084 h x 415 mA = 83.7 mAh |
| | **Subtotal = 8,623.5 mAh** |
| **Recovery (offload data, remove samples)** | |
| Controller Electronics (ON) – 2 hours | 2 h x 9.0 mA = 18.0 mAh |
| Moving Valve (25 ports, single port advance, once around) | 25 ports x 0.0022 h x 340 mA = 18.7 mAh |
| | **Subtotal = 36.7 mAh** |
| **Total Battery Consumption** | **125.7 + 8623.5 + 36.7 = 8786 mAh** |

In this example, the total energy consumed is less than the 10,000 mAh capacity of the battery and the proposed deployment plan will have sufficient battery life.

## Starting the Deployment

After a deployment schedule and event parameters have been defined, the PPS deployment can be started.

Start a deployment:

1. Select Main Menu option <6> Deploy System.
2. Confirm the system time.
3. If data from a previous deployment exists in memory or EEPROM, a system warning will warn that is going to be deleted before continuing with the deployment. Answer "Y" to continue.
4. When asked to define a new schedule, answer no to use a predefined schedule and deployment parameters. Answer "N" to redefine the schedule and deployment parameters.

```
Configuration: WTS-125M-SV-AF          CF2 V2_09 of Aug 28 2017

               McLane Research Laboratories, Inc.
                     Water Transfer System
                           ML14374-01
               ____________________________
                           Main Menu
               ____________________________
                   Tue Aug 29 11:21:41 2017

                              Port 99

          <1> Set Time          <5> Create Schedule
          <2> Diagnostics       <6> Deploy System
          <3> Manual Operation  <7> Offload Data
          <4> Sleep             <8> Contacting McLane
          <C> Configure

          Selection [] ? 6

Seeking home port.. located. Aligning... Confirmed.


Clock reads 08/29/17 11:22:26.  Change [N] ?

Existing deployment data file will be erased. Continue [N] ? y

Enter new deployment schedule [N] ? n
```

*Figure 6-21: Start a Deployment*

5. Verify the schedule and parameters, and modify any event that needs modification.
6. If the fixative valve is installed, a warning about filling the exhaust bag with a volume of water will appear. Press any key to continue.
7. The system will perform a six second a low-power sleep mode test to verify that backup power is functioning properly.
8. A warning about deleting previous deployment data stored inside of EEPROM, go ahead and answer "Y" if previous deployment data has already been offloaded.
9. The system then prompts the user to disconnect communications and connect the dummy plug onto the communications bulkhead connector before entering low-power sleep mode until the start time of the first deployment event.

```
 WARNING -- In order to avoid possible damage to the solenoid valve,
            make sure that all air was purged from the fixative bags.
            If a fixative exhaust bag is being used, it is critical
            that it was purged of air and filled with 100.0 ml of water.

           Press any key to continue.

Performing 6 second low-power sleep mode test...

System status: 08/29/17 11:23:06  32.3Vb  24°C  Port 00

 CAUTION -- Deployment will erase all EEPROM data backup entries.

Proceed with the deployment Yes|No [N] ? y

Erasing EEPROM entries .......................

Remove communication cable and attach dummy plug.

System is ready to deploy.

08/29/17 11:23:15 Waiting for event 1 of 23 @ 08/30/17 12:00:00
08/29/17 11:23:16 Suspended until 08/30/17 12:00:00 ...
```

*Figure 6-22: System Ready to Deploy*

**Waking the sampler after this point will cancel the deployment.** If the user is curious whether the system is still working DO NOT wake the device. Instead connect to the device, and press any key. The system will print the system time and “Suspended until” the start time of the next scheduled event.

## Final steps before Deployment

Deploying the PPS requires the following (in order):

- Connect the battery and close the end cap (see chapter 4 “Getting Started” for details about the end cap and connectors).
- Connect the communications cable and confirm firmware deployment settings (see chapter 6 “Deployment Preparation” for details about programming the deployment).
- Disconnect the communications cable and attach the dummy plug.
- Attach the PPS to the mooring.

# Chapter 7
# Deployment Recovery, and System Maintenance

## Recovery Procedure

After the deployment is completed, the required steps are:

- Retrieve the filters for sample analysis.
- Offload the deployment data.
- Clean PPS fluid paths, filter holders, fixative valve, and plumbing.

## Retrieving Filters for Sample Analysis

After a deployment is complete and the system has been recovered, the filter holders can be removed for sample analysis. The quick disconnect connector on the bottom of the 47 mm filter holder is a valved connection and should do a good job of containing the contents of the filter holder. Hose-C and a syringe can be used to remove the liquid contents of a filter holder. The details of processing the sample contained in a filter holder will vary from deployment to deployment, and will ultimately need to be decided by the scientist. If fixative was used during the deployment, make sure to follow all safety procedures while handling the filter holders.

## Offloading Deployment Data

Deployment event data and pumping data is stored to volatile memory and non-volatile EEPROM during a deployment. After a system is recovered this data can be offloaded and captured to a text file for future analysis.

```
_____________________________________________________________
Configuration: WTS-125M-SV             CF2 V2_05 of May  9 2016

                _______________________________
                    Offload/Display Data File
                _______________________________

                    Mon Oct 24 13:04:49 2016

          <1> Display ALL data
          <2> Display event summary data
          <3> Display pump data
          <4> EEPROM data backup cache

          <M> Main Menu

          Selection [] ? 1
```

*Figure 7-1: Offload/Display Data File Menu*

Connect the communications cable to a computer and then connect the communications cable to the PPS.

The computer should be on and McLaneTerm running before connecting to the PPS electronics. Do not disconnect the battery (which erases the data) until checking the capture files to confirm that the data offload was successful.

## Offload menu options:

**<1> Display ALL data:** Displays all event summary and pumping data stored in volatile RAM memory. If power is removed, this data is lost.

**<2> Display event summary data:** Displays only event summary data.

**<3> Display pump data:** Displays only the pumping data recorded and the pump data interval programmed while setting up the deployment.

**<4> EEPROM data backup cache:** Displays EEPROM event data summary. While the data is limited, it will remain in memory after power is cycled.

To offload deployment data:

1. Establish communication with the PPS and start a capture file named "PPS_OFFLOAD_[DATE & TIME].txt".
2. Select Main Menu option <7> to offload data.
3. Select Offload menu option <1> to display all data. After all the data has been printed to the screen press any key to return to the offload menu.
4. Select Offload menu option <4> to display the backup deployment data summary to the screen. Press any key to return to the offload menu.
5. Stop logging to file.
6. Select Offload menu option <M> to return to the main menu, and put the device to sleep.

The screens that follow show an exampling of selecting Option <1> ‘Display ALL Data’.

```
_____________________________________________________________
Configuration: WTS-125M-SV             CF2 V2_05 of May  9 2016


                _________________________________
                    Offload/Display Data File
                _________________________________

                    Mon Oct 24 13:04:49 2016

          <1> Display ALL data
          <2> Display event summary data
          <3> Display pump data
          <4> EEPROM data backup cache

          <M> Main Menu

          Selection [] ? 1

Start the capture file now.



 Then, press any key to start the transfer.  The data
 file will remain in memory and is not erased by this
 offload procedure.

Software version:  WTS-2.05.c

 Compiled:          May  9 2016 14:09:28
 Electronics S/N:   ML12345-03

 Data start:        10/24/16 10:57:20
 Data stop:         10/24/16 13:04:37
```

*Figure 7-2: Offload/Display Data File – Display All (1 of 3)*

```
_______
HEADER
_______
 Bench Test, 10-24-2016

 s/n 12345-03

 FJH


__________________
EVENT PARAMETERS
__________________

                            |Flush  Time  |Sample Flow  Min   Time  |Fixative Flow  Min   Time
                            |Vol    Limit |Vol    Rate  Rate  Limit |Vol      Rate  Rate  Limit

Event  1: 10/24/16 11:00:00  |100    3     |150    100   50    4     |25       100   50    1
Event  2: 10/24/16 11:13:20  |100    3     |150    100   50    4     |25       100   50    1
Event  3: 10/24/16 11:26:40  |100    3     |150    100   50    4     |25       100   50    1
. . .
Event  9: 10/24/16 12:46:40  |100    3     |150    100   50    4     |25       100   50    1
Event 10: 10/24/16 13:00:00  |100    3     |150    100   50    4     |25       100   50    1

Pump data period: 1 minute

_______________
DEPLOYMENT DATA
_______________

1  10/24/16 11:00:01   25∞C         31.7 Vb  Port 00
Intake flush       100 ml       49 sec  LB 31.7 V  Average I   83 mA Highest I   90 mA  Port 00    Volume reached
Sample                  151 ml       91 sec  LB 31.7 V  Average I   65 mA Highest I   72 mA  Port 01  Volume reached
Fixative flush           26 ml       16 sec  LB 31.7 V  Average I   60 mA Highest I   63 mA  Port 01  Volume reached
10/24/16 11:03:22   26∞C           31.7 Vb  Port 00

2  10/24/16 11:13:22   24∞C           31.7 Vb  Port 00
Intake flush            100 ml       49 sec  LB 31.7 V  Average I   89 mA Highest I   95 mA  Port 00  Volume reached
Sample                  151 ml       91 sec  LB 31.7 V  Average I   68 mA Highest I   78 mA  Port 02  Volume reached
Fixative flush           26 ml       15 sec  LB 31.7 V  Average I   65 mA Highest I   70 mA  Port 02  Volume reached
. . .
10  10/24/16 13:00:01   26∞C           31.7 Vb  Port 00

Intake flush            100 ml       49 sec  LB 31.7 V  Average I   87 mA Highest I   95 mA  Port 00  Volume reached
Sample                  151 ml       90 sec  LB 31.7 V  Average I   61 mA Highest I   71 mA  Port 10  Volume reached
Fixative flush           26 ml       16 sec  LB 31.6 V  Average I   67 mA Highest I   73 mA  Port 10 Volume reached
10/24/16 13:04:36   28∞C           31.7 Vb  Port 00
```

*Figure 7-3: Offload/Display Data File – Display All (2 of 3)*

```
___________
PUMPING DATA
____________

 Pump data period = 1 minute

  [event#]  [ml/min]    [ml]     [Vbat]    [Av. Cur]    [High Cur]

      1       100        100      31.7        65.0         72.0
      2       100        100      31.7        68.0         78.0
      3       100        100      31.7        67.0         75.0
      4       100        100      31.7        65.0         73.0
      5       100        100      31.7        63.0         71.0
      6       100        100      31.7        67.0         74.0
      7       100        100      31.7        70.0         78.0
      8       100        100      31.7        65.0         71.0
      9       100        100      31.7        66.0         72.0
     10       100        100      31.7        62.0         71.0


 End of instrument data file.

 Terminate file logging operation now
 and press any key to continue.
```

*Figure 7-4: Offload/Display Data File – Display All (3 of 3)*

## System Maintenance

It is important to properly maintain your sampler to ensure optimal performance and to prevent damage to the system. Perform the following system checks and maintenance procedures after every deployment.

### Cleaning the PPS Fluid Paths and Filter Holders

Allowing the buildup of biofouling and salt is detrimental to system performance and will shorten sampler life. Flushing the PPS is very important. Any firmware version after 2.09 has an automatic system flush in the Manual Operations menu. The system flush can be used to pump a cleaning solution through each port for a user-specified amount of time between 10 – 120 seconds at a flow rate of 75 ml / minute. Follow the steps in this section to clean the fluid pathways of the PPS after every deployment.

The recommended cleaning solution is a 1:10 hydrochloric acid water mixture or a 1:10 bleach water mixture.

### Cleaning the PPS System Plumbing

To clean the PPS system plumbing:

1. Establish communication with the PPS.
2. After removing all filters from the filter holders (including the port 0 flush filter), reassemble and reinstall the filter holders.
3. Place a container of neutral water or a cleaning solution on top of the 25 port valve.
4. Connect Hose-A to the common system intake port on the top half of the 25 port valve. If the fixative valve is installed on the PPS attach Hose-A to the water intake port of the fixative valve.
5. To avoid making a mess, Connect Hose-B to the exhaust port of the pump, and place the opposite end in a container to collect the system exhaust. If the fixative valve is installed on the PPS, connect Hose-B to the water exhaust port of the fixative valve instead of the pump exhaust port.

6. If the antifouling reservoir is installed on the PPS you will need to bypass the reservoir by disconnecting the Antifoul-1 and Antifoul-2 hoses from the tube, and connecting them both to Hose-E. This will allow you to clean the port 24 plumbing.
7. Select option <F> from the Manual Operations menu, and specify how many seconds (within a range of 10 to 120) to run each port flush.
8. Keep an eye on the water container, and make sure not to let it run dry, the system will automatically pump through every filter position.

If a cleaning solution is used to flush the system, make sure to perform another flush with water to rinse the cleaning solution from the system.

## Cleaning the Fixative Valve Plumbing

If the fixative valve is installed, perform the following steps to clean the fixative from the system plumbing.

1. Establish communication with the PPS.
2. Use Manual Operation menu option <1> to align the 25 port valve to the home port (port 0).
3. Remove the fixative bag and fixative exhaust bag from the system. Hose-D can be used to seal each bag until the fixative can be disposed of properly.
4. Connect Hose-A to the Fixative Intake hose in the fixative box and place the opposite end in a container of neutral water.
5. Connect Hose-B to the Fixative Exhaust hose in the fixative box and place the opposite end in a container of neutral water.
6. Use Manual Operation menu option <8> to switch the fixative valve to the ON (fixative) position.
7. Use Manual Operation menu option <7> to pump 300 ml at 125 ml/minute. This will flush all of the fixative plumbing.

8. Use Manual Operation menu option <8> to switch the fixative valve to the OFF (fixative) position.

## Cleaning and Inspecting the Filter Holders

After the lines have been cleaned and rinsed, open the filter holders and clean the threads and O-rings with alcohol and a lint-free wipe. Inspect the O-rings visually and feel them for wear. Make sure each filter holder has all three O-rings properly installed.

## Rinsing the System

It is very important to clean and rinse the entire system after a deployment with fresh water. Storing a dirty system until the next deployment can lead to serious problems that void the warranty and prevent the PPS from functioning correctly.

## Inspecting the Pump

Checking pump performance after a deployment can avoid a last minute emergency pump service before the next deployment.

### Volume Test

To perform a volume test:

1. Establish communication with the PPS.
2. Connect Hose-A to the pump intake and place the opposite end in a container of neutral water.
3. Connect Hose-B to the pump exhaust and place the opposite end in a graduated cylinder.
4. Use Manual Operation menu option <7> to pump 100 ml at 125 ml / minute.
5. A healthy pump should pump slightly over the requested volume.

## Pump Gear Inspection

Periodically examine the graphite pump gears and replace them if there are any visible signs of wear or cracks. To inspect the gears, complete the following steps:

1. Remove the pump from the PPS and remove the four screws that hold the pump head to the pump housing.
2. Carefully remove the pump head from the pump housing (the gears are mounted on the bottom of the pump head). Invert the pump housing for easier removal.

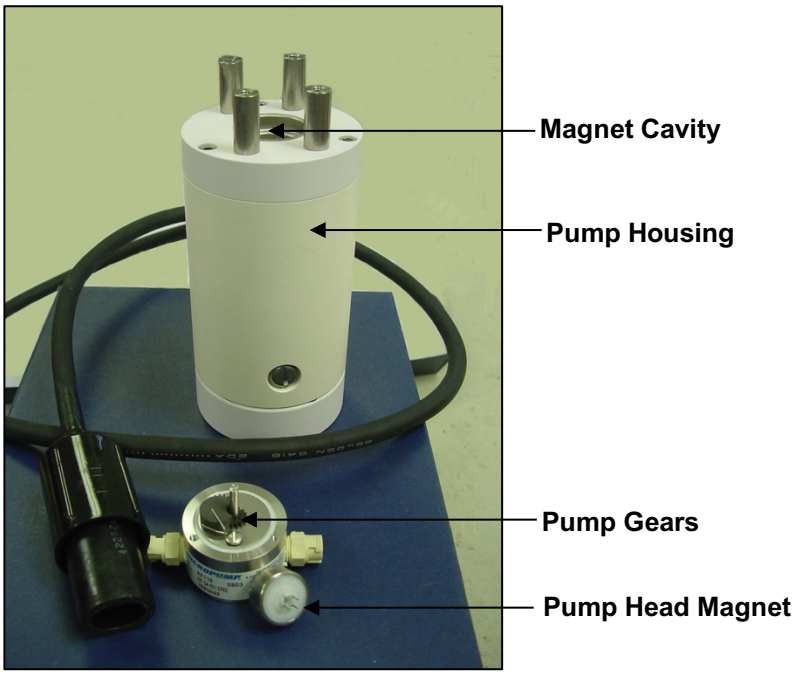


*Figure 7-5: Pump Housing, Gears, and Pump Head Magnet*

Do not remove the magnet cavity from the pump motor housing (the area under the metal cavity is filled with oil).

3. Inspect the gears and suction shoe for damage.

## Storage

The shipping crate is a reusable international freight container that is ISPM-15 compliant for international transport.

To prevent instrument damage during transport or storage, the crate should remain upright. Avoid excessive vibration and extreme temperatures for prolonged periods of time.

Before storing a PPS for more than one month:

- Offload all data from memory.
- Rinse all instrument components with fresh water.
- Flush the valve with fresh water.
- Always disconnect and remove batteries. For user replaceable “D” cell alkaline batteries, dispose of the batteries. If using an older system with a battery pack, cover the connector with insulation tape and store the battery in a refrigerator.
- Reassemble the main battery holder and insert the electronics package back into the controller housing.
- Replace all bolts and apply a small amount of anti-seize to the threads.
- Inspect, and if necessary, replace the zinc anodes attached to the controller housing end caps. When installing new zinc anodes, use 316 stainless steel hardware and include the o-ring

## Notes

# Appendix A
# Adaptive Sampling Firmware

Adaptive sampling firmware provides the user with command-line control over the PPS. By issuing commands from a provided command set, the user has full control over the system and can execute valve movements, pumping operations, and other system functions.

The Adaptive Sampling option requires a continuous RS-232 connection from the PPS to a computer or other microcontroller.

PPS Adaptive Sampling firmware AWT-2_05 and higher includes Antifouling and Fixative Valve commands, and an Adaptive Deployment option. Adaptive deployment automates many of the necessary steps required to perform a deployment from the command-line interface.

- The Antifouling option replaces Sample 24 with an antifouling reservoir bag and sample container.
- The Fixative Valve option is used to administer a fixative onto the sample filter after the water sample has been taken. See the User Manual for more detailed information.

## Adaptive Deployment

An Adaptive Deployment is a deployment that is pre-programmed to perform the same functions as a standard (time-series) deployment, except that a serial command sent to the controller triggers each sample collection. In standard deployment mode, a date and time trigger sample collection.

Adaptive deployment provides a single command that automates many deployment steps, or users can perform on-demand actions by using commands that function the same as the Manual Operations menu in the standard PPS firmware.

## Command Prompt

In Adaptive Deployment mode, there is no menu as in the standard firmware. A Command Prompt is displayed as shown below.

```
07/20/2016 09:57:10 AWT ML12345-67>
```

The command prompt is formatted with the current date (mm/dd/yyyy format), current time (hh:mm:ss format), firmware family name, and instrument serial number followed by the ">" symbol.

```
_____________________________________________________________
CF2-AWT-2.05 R3 L2.3 |  ADEV2.05.c compiled Apr  1 2016 at 14:58
    WTS-125M  S/N ML12345-67  Adaptive Water Transfer System
 © 2010-2016 McLane Research Laboratories. All rights reserved.
_____________________________________________________________
Seeking home port ...
Seeking home port...
Port 00
Port 01
Home port located. Aligning... Confirmed
McLane Research Laboratories, Inc.
CF2 Adaptive Remote Sampler
Version 3.04 of Mar 13 2015 08:55
Pump type: Maxon 125ml
Bag capacity: 100
Type "Help" or "?" at the prompt, or with a command.
03/16/15 10:54:00 Suspended ... ?   <------ Command Prompt
Enter ^C now to wake up ...  [^C]
03/20/15 09:57:10 AWT ML12345-67>
```

*Figure A-1: Adaptive Deployment Mode*

## Waking the Instrument from the Command Prompt

Adaptive firmware will automatically enter low-power sleep mode to conserve power after 20 minutes of inactivity. In order to wake the device, enter *<CTRL>-C* three times with a one second pause between each *<CTRL>-C*.

| Command to Controller | Response from Controller |
|---|---|
| <CTRL>-C | ? |
| <CTRL>-C | Enter ^C now to wake up ... |
| <CTRL>-C | 03/16/15 11:06:50 AWT ML12345-67><br>Sampler is now ready to receive commands |

## AWT Commands (Adaptive PPS Sampling)

The section that follows lists AWT commands included in firmware AWT-2_05 and higher. Some parameters are password protected to prevent accidental configuration changes. Where passwords are required, the entry is *mclane*. Commands are listed in alphabetical order.

### Command Help

Command help is displayed by entering "Help" at the command line, or by entering a question mark after a specific command (Figure A-2).

```
07/15/16 10:19:21 AWT ML12345-67>applyfixative ?
_____________
APPLYFIXATIVE
_____________

____________
Description:
____________
Apply fixative using the provided parameters.

Example: APPLYFIXATIVE 10 100 50 0 1
_______
Syntax:
_______
APPLYFIXATIVE |volume|flow rate|min. flow|time limit|port
```

**Type *command ?* for Help**

**Command description**

**Command example**

**Command syntax**

*Figure A-2: Command Help*

| |
|---|
| Command:<br>ANTIFOUL |
| Syntax:<br>ANTIFOUL \| ENABLE or DISABLE |
| Description:<br>Enables or disables antifoul operations. |
| Example:<br>03/20/15 09:57:10 AWT ML12345-67>ANTIFOUL ENABLE<br>03/20/15 09:57:10 AWT ML12345-67>ANTIFOUL DISABLE |

| |
|---|
| Command:<br>ANTIFOULFLUSH |
| Syntax:<br>ANTIFOULFLUSH \| volume \| flow rate \| min. flow rate \| time limit |
| Description:<br>Performs an Antifouling Flush using the specified parameters. |
| Example:<br>03/20/15 09:57:10 AWT ML12345-67>ANTIFOULFLUSH 20 80 50 0 |

| |
|---|
| Command:<br>APPLYFIXATIVE |
| Syntax:<br>APPLYFIXATIVE \| volume \| flow rate \| min. flow rate \| time limit \| port |
| Description:<br>Performs a Fixative Flush using the specified parameters. |
| Example:<br>03/20/15 09:57:10 AWT ML12345-67>APPLYFIXATIVE 20 80 50 0 1<br><br>Applies 20 ml of fixative to port 1 at 80 ml / min with a min. rate of 50 and an automatically calculated time limit. |

| |
|---|
| Command:<br>BATTERY |
| Syntax:<br>BATTERY |
| Description:<br>Displays the battery voltage. |
| Example:<br>03/20/15 09:57:10 AWT ML12345-67>battery<br>Battery: 32.1V [Alkaline, 18V minimum] |

| |
|---|
| Command:<br>CLOCK |
| Syntax:<br>CLOCK mm/dd/yy hh:mm:ss |
| Description:<br>Sets the date and time. |
| Example:<br>03/20/15 10:02:45 AWT ML12345-67>clock 03/20/2015 10:04:06<br>Clock: 03/20/15 10:04:06 |

| |
|---|
| Command:<br>CODES |
| Syntax:<br>CODES |
| Description:<br>Displays the pumping termination code table. Pumping codes are displayed in the RESULT command. |
| Example:<br>03/20/15 10:04:06 AWT ML12345-67>codes<br><br>Termination Codes:<br># description<br>0 = Pumping in progress<br>1 = Volume reached<br>2 = Time limit reached<br>3 = Min flow reached<br>4 = Low battery<br>5 = Stopped by user<br>6 = Pump would not start |

| |
|---|
| Command:<br>COPYRIGHT |
| Syntax:<br>COPYRIGHT |
| Description:<br>Displays the firmware copyright notice. |
| Example:<br>03/20/15 10:04:06 AWT ML12345-67>copyright<br><br>CF2-AWT-2.05 R3 L2.3 \| ADEV2.05.c compiled Apr 1 2016 at 14:58<br>WTS-125M S/N ML12345-67 Adaptive Water Transfer System<br>© 2010-2016 McLane Research Laboratories. All rights reserved. |

| |
|---|
| Command:<br>DATE |
| Syntax:<br>DATE mm/dd/yy |
| Description:<br>Sets the date. |
| Example:<br>03/20/15 10:46:20 AWT ML12345-67>date 03/20/15<br>Clock: 03/20/15 10:47:04 |

| |
|---|
| Command:<br>EXIT<br>password required |
| Syntax:<br>EXIT [*password*] |
| Description:<br>Exits the program to the operating system.<br>Restart the program by typing *app* at the prompt. |
| Example:<br>03/20/15 10:47:04 AWT ML12345-67>exit mclane |

| |
|---|
| Command:<br>FORWARD |
| Syntax:<br>FORWARD volume \| flow rate \| min. flow rate \| time limit |
| Description:<br>Starts a forward pump operation.<br>If zero is entered for time limit, time limit will automatically be calculated based on the volume and the minimum allowable flow rate. |
| Example:<br>03/20/15 10:41:10 AWT ML12345-67>forward 50 100 50 0 |

```
          | --- command --- | ------------------------- result -------------------------- |
     port   vol flo min  tl     vol flowr minfl sec mmddyy hhmmss   batt V   pump cur. code
Status 00 |  50 100  50   2 |   1.1  69.0   0.0   1 040116 111220 | 29.8 V   91 mA     0
Status 00 |  50 100  50   2 |   2.7  92.0   0.0   2 040116 111221 | 29.8 V   87 mA     0
Status 00 |  50 100  50   2 |   4.3  99.9   0.0   3 040116 111222 | 29.8 V   80 mA     0
Status 00 |  50 100  50   2 |   6.0 100.3   0.0   4 040116 111223 | 29.8 V   90 mA     0
Status 00 |  50 100  50   2 |   7.7 100.3   0.0   5 040116 111224 | 29.8 V   88 mA     0
Status 00 |  50 100  50   2 |   9.4  99.9   0.0   6 040116 111225 | 29.8 V   89 mA     0
Status 00 |  50 100  50   2 |  11.0  99.9   0.0   7 040116 111226 | 29.8 V   85 mA     0
Status 00 |  50 100  50   2 |  12.7 100.3   0.0   8 040116 111227 | 29.8 V   88 mA     0
```

| Command: |
|---|
| HELP |
| Syntax: |
| [*command*] ? |
| Description: |
| Displays the help text including syntax. |
| Example:<br>07/15/16 10:19:21 AWT ML12345-67>applyfixative ?<br>_____<br>APPLYFIXATIVE<br>_____<br><br>_____<br>Description:<br>_____<br><br>Apply fixative using the provided parameters.<br><br>Example: APPLYFIXATIVE 10 100 50 0 1<br>_____<br>Syntax:<br>_____<br><br>APPLYFIXATIVE \|volume\|flow rate\|min. flow\|time limit\|port |

| Command: |
|---|
| HISTORY |
| Syntax: |
| HISTORY |
| Description: |
| Displays the command history list. |
| Example:<br>07/15/16 10:19:21 AWT ML12345-67>HISTORY<br><br>-1: COPYRIGHT<br>-2: VERSION<br>-3: SERIAL<br>-4: CODES<br>-5: CLOCK 11/11/11 11:11:11<br>-6: DATE 11/11/11<br>-7: TIME 11:11:11<br>-8: TIME<br>-9: BATTERY<br>-10: ID<br>-11: REVERSE 50 100 50 0<br>-12: PUMPTYPE mclane maxon 125<br>-13: PUMPTYPE |

| |
|---|
| Command:<br>HOME |
| Syntax:<br>HOME |
| Description:<br>Sets the valve to the home position |
| Example:<br>07/15/16 10:19:21 AWT ML12345-67>HOME<br><br>Seeking port 24... Located. Aligning... Confirmed.<br>Seeking home port... Located. Aligning... Confirmed.<br><br>Port: 00 |

| |
|---|
| Command:<br>ID |
| Syntax:<br>ID |
| Description:<br>Displays identification information. |
| Example:<br>07/15/16 10:19:21 AWT ML12345-67>ID<br><br>Identity: CF2-ADEV2.05 ML12345-67 |

| |
|---|
| Command:<br>MCLANE |
| Syntax:<br>MCLANE |
| Description:<br>Displays McLane contact information. |

| |
|---|
| Command:<br>OFFLOAD |
| Syntax:<br>OFFLOAD ALL |
| Description:<br>Offloads deployment data. |
| Example: 03/20/15 10:41:10 AWT ML12345-67> OFFLOAD ALL |

| |
|---|
| Command:<br>OFFLOADEEP |
| Syntax:<br>OFFLOADEEP |
| Description:<br>Offloads EEPROM deployment data |
| Example:<br>Example: 03/20/15 10:41:10 AWT ML12345-67> OFFLOADEEP<br>_____<br>EVENT SUMMARY<br>_____<br><br>Event: 1<br><br>Start time: 04/01/16 11:26:34<br>Volume pumped: 101 ml<br>Elapsed time: 61 sec<br>Lowest battery: 29.8 V<br>Average current: 87.0 mA<br>Highest current: 93.0 mA<br>Port used: 00<br>Stop time: 04/01/16 11:29:41<br>Status: Volume reached<br><br>End of EEPROM event backup cache.<br><br>Terminate file logging operation now<br>and press any key to continue.<br><br>End of EEPROM data. |

| |
|---|
| Command:<br>PAUSEDEPLOY |
| Syntax:<br>PAUSEDEPLOY |
| Description:<br>Pauses an adaptive deployment. This command is built in because certain commands cannot be executed while there is an active deployment. It is not suggested to enter these commands mid-deployment, but this command makes it possible. |

| Command: |
| --- |
| PORT |
| Syntax: |
| PORT [port] |
| Description: |
| Displays or sets the valve position. |
| Example: |
| 03/20/15 10:51:20 AWT ML12345-67>port 1 |

| Command: |
| --- |
| PRINTPARMS |
| Syntax: |
| PRINTPARAMS |
| Description: |
| Print the programmed event parameters. |
| Example: |

```
03/20/15 10:51:20 AWT ML12345-67>PRINTPARAMS

 SAMPLE PARAMETERS
 ___________________

 04/01/16 11:12:55

 Water Flush:
 Volume         [ml]        = 100
 Flow rate      [ml/min]    = 100
 Min. flow rate [ml/min]    = 50
 Time limit     [minutes]   = 3

 Sample:
 Volume         [ml]        = 101
 Flow rate      [ml/min]    = 101
 Min. flow rate [ml/min]    = 51
 Time limit     [minutes]   = 3

 Fixative Flush:
 Volume         [ml]        = 25
 Flow rate      [ml/min]    = 70
 Min. flow rate [ml/min]    = 50
 Time limit     [minutes]   = 1
```

| |
|---|
| Command:<br>PUMPTYPE<br>*password required* |
| Syntax:<br>Set pump type: PUMPTYPE \| password \| Maxon or Pittman \| 125 or 250<br>Display pump type: PUMPTYPE |
| Description:<br>Displays or sets the pump type. |
| Example:<br>03/20/15 10:52:39 AWT ML12345-67>pumptype mclane maxon 250<br>Configuration successfully stored<br>Pump type: Maxon 250ml |

| |
|---|
| Command:<br>QUIT<br>*password required* |
| Syntax:<br>QUIT [*password*] |
| Description:<br>Quits the program. |
| Example:<br>03/20/15 10:52:39 AWT ML12345-67>quit mclane |

| |
|---|
| Command:<br>REBOOT |
| Syntax:<br>REBOOT |
| Description:<br>Reboots system, after confirming the command. |
| Example:<br>03/20/15 10:52:39 AWT ML12345-67>REBOOT<br><br>Reboot the system? [N] ? |

| |
|---|
| Command:<br>REBOOTNOW |
| Syntax:<br>REBOOTNOW |
| Description:<br>Reboots system immediately. |

| |
|---|
| Command:<br>RESULT |
| Syntax:<br>RESULT |
| Description:<br>Report results for last PUMPING operation.<br>Format:<br>Result port \| vol flow minf tlim \| vol flow minf secs date-time \| batt code |
| Example: |

| |
|---|
| Command:<br>RESUMEDEPLOY |
| Syntax:<br>RESUMEDEPLOY |
| Description:<br>Resumes an adaptive deployment. |
| Example: |

| |
|---|
| Command:<br>REVERSE |
| Syntax:<br>REVERSE volume flowrate minflow timelimit |
| Description:<br>Start a reverse pump operation.<br><br>If zero is entered for time limit, time limit will automatically be calculated based on the volume and the minimum allowable flow rate. |
| Example:<br>03/20/15 10:41:10 AWT ML12345-67>reverse 50 100 50 0<br><br>\| --- command --- \| ---------- result ---------- \|<br>port vol flo min tl vol flowr minfl sec mmddyy hhmmss batt V pump cur. code<br>Status 00 \| 50 100 50 2 \| 1.1 65.2 0.0 1 040116 111148 \| 29.8 V 89 mA 0<br>Status 00 \| 50 100 50 2 \| 2.6 88.6 0.0 2 040116 111149 \| 29.8 V 99 mA 0<br>Status 00 \| 50 100 50 2 \| 4.2 97.4 0.0 3 040116 111150 \| 29.8 V 98 mA 0<br>Status 00 \| 50 100 50 2 \| 5.8 99.5 0.0 4 040116 111151 \| 29.8 V 98 mA 0<br>Status 00 \| 50 100 50 2 \| 7.5 99.9 0.0 5 040116 111152 \| 29.8 V 97 mA 0<br>Status 00 \| 50 100 50 2 \| 9.2 99.9 0.0 6 040116 111153 \| 29.8 V 97 mA 0 |

| Command: |
|---|
| SAMPLE |
| Syntax: |
| SAMPLE |
| Description: |
| Sample next position in an adaptive deployment using the predefined parameters programmed with the set command. The system must be in an active deployment. |
| Example: |
| See Figure E-3 in this Appendix |

| Command: |
|---|
| SAMPLERESULT |
| Syntax: |
| SAMPLERESULT |
| Description: |
| Displays results of last sample. |
| Example: |
| 03/20/15 10:41:10 AWT ML12345-67>SAMPLERESULT<br><br>1 Start: 04/01/16 11:26:34 29.8 Vbat 25.2 ¯C PORT = 00<br>Intake Flush PORT 00 100 ml 61 sec LB 29.8 V Average I 83.0 mA Highest I 89.0 mA<br>Volume reached<br>Sample PORT 01 101 ml 61 sec LB 29.8 V Average I 87.0 mA Highest I 93.0 mA<br>Volume reached<br>Fixative Flush PORT 01 25 ml 22 sec LB 29.8 V Average I 57.0 mA Highest I 64.0 mA<br>Volume reached<br><br>End: 04/01/16 11:29:42 29.8 Vbat 26.0 ¯C PORT = 00 |

| Command: |
|---|
| SERIAL |
| Syntax: |
| SERIAL |
| Description: |
| Displays the sampler serial number. |
| Example: |
| Serial: ML12345-67 |

| Command: |
| --- |
| SET |
| Syntax: |
| SET \| procedure name \| Procedure parameters (see examples) |
| Description: |
| Sets event parameters for an adaptive deployment. |
| Example:<br>Auto calculate time limits by entering zero for time limit value.<br>Example: SET WATER 100 200 50 0<br><br>To turn flush off just enter:<br>SET WATER 0<br><br>PRE-SAMPLE FLUSH PARAMETERS:<br>SET \| WATER \| VOLUME \| FLOW RATE \| MINIMUM FLOW RATE \| TIME LIMIT (Minutes)<br>Example: SET WATER 100 200 50 0<br><br>SAMPLE PARAMETERS:<br>SET \| SAMPLE \| VOLUME \| FLOW RATE \| MINIMUM FLOW RATE \| TIME LIMIT (Minutes)<br>Example: SET SAMPLE 500 200 50 0<br><br>FIXATIVE PARAMETERS (if solenoid valve is installed and enabled):<br>SET \| FIXATIVE \| VOLUME \| FLOW RATE \| MINIMUM FLOW RATE \| TIME LIMIT (Minutes)<br>Example: SET FIXATIVE 30 75 50 0<br><br>ANTIFOULING FLUSH PARAMETERS (If antifouling is installed and enabled):<br>SET \| ANTIFOUL \| VOLUME \| FLOW RATE \| MINIMUM FLOW RATE \| TIME LIMIT (Minutes)<br>Example: 03/20/15 10:41:10 AWT ML12345-67> SET ANTIFOUL 30 75 50 0 |

| Command: |
| --- |
| SLEEP |
| Syntax: |
| SLEEP |
| Description: |
| Invokes low-power sleep. |

| |
|---|
| Command:<br>STARTDEPLOY |
| Syntax:<br>STARTDEPLOY |
| Description:<br>Starts an adaptive deployment.<br><br>Allows user to perform samples using parameters defined with the SET command. The system automatically selects the next port in the deployment and will stop when there are no available ports left to sample. |
| Example:<br>See Figure E-8 in this Appendix. |

| |
|---|
| Command:<br>STOPDEPLOY |
| Syntax:<br>STOPDEPLOY |
| Description:<br>Stops an adaptive deployment. |

| |
|---|
| Command:<br>SV |
| Syntax:<br>SV \| ENABLE or DISABLE<br>SV \| ON or OFF<br>SV \| FIXATIVE or OCEAN |
| Description:<br>The SV command has arguments that will enable or disable the fixative valve, and switch the fixative valve position. ON is the alternate fluid source (typically a fixative) and off is the resting position, which is plumbed to the primary fluid source (the environment) you can use either the ON/OFF arguments or the OCEAN/FIXATIVE arguments to switch the valve position. |
| Example:<br>03/20/15 10:41:10 AWT ML12345-67>SV ENABLE<br>- Configures system with a solenoid valve.<br>03/20/15 10:41:10 AWT ML12345-67>SV DISABLE<br>- Configures system without a solenoid valve.<br>03/20/15 10:41:10 AWT ML12345-67>SV ON<br>- Energizes solenoid valve, switches to alternate fluid position.<br>03/20/15 10:41:10 AWT ML12345-67>SV FIXATIVE<br>Energizes solenoid valve, switches to alternate fluid position..<br>03/20/15 10:41:10 AWT ML12345-67>SV OFF<br>- De-energizes solenoid valve, moves to resting position (default fluid position).<br>03/20/15 10:41:10 AWT ML12345-67>SV OCEAN<br>- De-energizes solenoid valve, moves to resting position (default fluid position). |

| |
|---|
| Command:<br>TIME |
| Syntax:<br>TIME hh:mm:ss |
| Description:<br>Sets the time. |
| Example:<br>03/20/15 10:41:10 AWT ML12345-67>TIME 11:11:11<br>Clock: 04/01/16 11:11:11 |

| |
|---|
| Command:<br>VERSION |
| Syntax:<br>VERSION |
| Description:<br>Displays version information |
| Example:<br>03/20/15 10:41:10 AWT ML12345-67>VERSION<br><br>Version:<br><br>McLane Research Laboratories, Inc.<br>CF2 Adaptive Water Transfer System<br>Version 2.05 of Apr  1 2016 14:58<br>Pump type: Maxon 125ml |

| |
|---|
| Command:<br>VOLUME |
| Syntax:<br>VOLUME \| ANTIFOUL or FIXATIVE |
| Description:<br>Sets the available fixative or antifouling fluid volume. |
| Example:<br>03/20/15 10:41:10 AWT ML12345-67>VOLUME FIXATIVE 100<br>03/20/15 10:41:10 AWT ML12345-67>VOLUME ANTIFOULING 100 |

## Using Automated Adaptive Commands

To perform an adaptive deployment, use the SET, STARTDEPLOY and SAMPLE commands. Use the OFFLOAD DATA command to offload the deployment data.

### SET Command

With the SET command, the user can predefine water flush, sample parameters, fixative flush, and antifouling flush parameters.

```
03/13/15 10:43:48 AWT ML12345-67>set water 100 100 50 0
 Water Flush:
 Volume          [ml]      = 100
 Flow rate       [ml/min]  = 100
 Min. flow rate  [ml/min]  = 50
 Time limit      [minutes] = 3
```

*Figure A-3: SET Command*

### Deploy Commands

The commands STARTDEPLOY and ENDEPLOY start and stop the automated deployment. After the sample event parameters have been predefined, entering STARTDEPLOY starts the deployment. The system clears stored data from the previous deployment, then goes to sleep until the user enters the SAMPLE command to wake the system.

```
03/13/15 10:54:03 AWT ML12345-67>startdeploy

Erasing previous deployment data  .............
Deployment started.

04/01/16 11:12:58 Suspended ...
04/01/16 11:20:01 Suspended ...

 SAMPLE

04/01/16 11:26:34 Event 1 starting
```

*Figure A-4: STARTDEPLOY Command*

### Sample Command

When the SAMPLE command is entered the system automatically selects the next available port, executes the predefined sample parameters, and records event data. The system locates the next port, confirms alignment and remains in suspend mode until the next sample is automatically triggered (Figure A-5).

The SET command can be run during the deployment to change the sample volume, flow rates and time limits, for the remaining samples.

```
12/10/15 16:14:58 AWT ML12935-01>sample
12/10/15 16:15:01 Event 1 starting
                                                  ← Collect Sample
_____________________
FLUSHING INTAKE PORT
_____________________
           | --- command --- | ------------------------- result -------------------------- |
     port   vol flo min  tl     vol flowr minfl sec mmddyy hhmmss   batt V   pump cur. code
Status 00 |  50 125 100   1 |   0.6  36.4   0.0   1 121015 161503 | 22.5 V    105 mA     0
Status 00 |  50 125 100   1 |   2.0  81.1   0.0   2 121015 161504 | 22.5 V    129 mA     0
. . .  ← Shortened to save space
Status 00 |  50 125 100   1 |  47.1 125.0 125.0  24 121015 161526 | 22.5 V    151 mA     0
Status 00 |  50 125 100   1 |  49.2 125.0 125.0  25 121015 161527 | 22.5 V    140 mA     0

 Volume reached

 Total volume pumped     = 50 ml
 Elapsed time of event   = 26 sec
 Lowest battery detected = 22.5 V
 Average pump current    = 142 mA
 Highest pump current    = 151 mA

Seeking port 01...
Located.
Aligning...
Confirmed.
_____________
PUMPING SAMPLE
_____________
           | --- command --- | ------------------------- result -------------------------- |
     port   vol flo min  tl     vol flowr minfl sec mmddyy hhmmss   batt V   pump cur. code
Status 01 | 255 125  50   6 |   0.6  36.4   0.0   1 121015 161540 | 22.5 V    108 mA     0
Status 01 | 255 125  50   6 |   2.0  81.5   0.0   2 121015 161541 | 22.5 V    133 mA     0
. . .  ← Shortened to save space
Status 01 | 255 125  50   6 | 251.4 125.0 124.6 122 121015 161741 | 22.5 V    150 mA     0
Status 01 | 255 125  50   6 | 253.5 125.0 124.6 123 121015 161742 | 22.5 V    147 mA     0

 Volume reached

 Total volume pumped     = 255 ml
 Elapsed time of event   = 124 sec
 Lowest battery detected = 22.5 V
 Average pump current    = 149 mA
 Highest pump current    = 153 mA

Seeking port 02...
Located.
Aligning...
Confirmed.

12/10/15 16:18:48 AWT ML12935-01>set sample 200 75 50 0  ← Set Sample Parameters
 Sample:
 Volume          [ml]      = 200
 Flow rate       [ml/min]  = 75
 Min. flow rate  [ml/min]  = 50
 Time limit      [minutes] = 5
12/10/15 16:19:01 AWT ML12935-01>sample
12/10/15 16:19:04 Event 2 starting                ← Collect Sample
_____________________
FLUSHING INTAKE PORT
_____________________
           | --- command --- | ------------------------- result -------------------------- |
     port   vol flo min  tl     vol flowr minfl sec mmddyy hhmmss   batt V   pump cur. code
Status 00 | 100  75  50   3 |   0.6  36.8   0.0   1 121015 161906 | 22.5 V     75 mA     0
Status 00 | 100  75  50   3 |   1.6  57.3   0.0   2 121015 161907 | 22.5 V     84 mA     0
          ← Shortened to save space
```

*Figure A-5: SAMPLE and SET Commands*

## Ending the Deployment

The deployment automatically ends when all available ports have been sampled. Alternatively, the user can end the deployment at any point using the STOPDEPLOY command. Once STOPDEPLOY is entered, the automated deployment cannot be restarted.

```
. . .
Status 01 | 101 101  51   3 |  97.0 100.8 100.8  58 040116 112845 | 29.8 V     90 mA     0
Status 01 | 101 101  51   3 |  98.7 101.2 100.8  59 040116 112846 | 29.8 V     88 mA     0
Status 01 | 101 101  51   3 | 100.4 100.8 100.8  60 040116 112847 | 29.8 V     84 mA     0
 Volume reached

 Total volume pumped     = 101 ml
 Elapsed time of event   = 61 sec
 Lowest battery detected = 29.8 V
 Average pump current    = 87 mA
 Highest pump current    = 93 mA

Seeking port 24...
Located.

Aligning...
Confirmed.

Seeking home port...
Located.

Aligning...
Confirmed.

Sample completed. Normal shutdown now in effect.
04/01/16 16:18:10 Suspended ...
```

*Figure A-6: Deployment Ends After Last Sample*

```
Seeking port 01...  Located. Aligning...  Confirmed.
. . .
_____________
PUMPING SAMPLE
_____________
         | --- command --- | ------------------------- result -------------------------- |
     port   vol flo min  tl     vol flowr minfl sec mmddyy hhmmss   batt V  pump cur. code
Status 01 | 101 101  51   3 |   1.2  69.8   0.0   1 040116 112748 | 29.8 V  90 mA     0
Status 01 | 101 101  51   3 |   2.7  92.8   0.0   2 040116 112749 | 29.8 V  88 mA     0
Status 01 | 101 101  51   3 |   4.4 100.3   0.0   3 040116 112750 | 29.8 V  88 mA     0
Status 01 | 101 101  51   3 |   6.1 101.2   0.0   4 040116 112751 | 29.8 V  88 mA     0
. . .
```

**Shortened to save space**

```
Status 01 | 101 101  51   3 |  97.0 100.8 100.8  58 040116 112845 | 29.8 V     90 mA     0
Status 01 | 101 101  51   3 |  98.7 101.2 100.8  59 040116 112846 | 29.8 V     88 mA     0
Status 01 | 101 101  51   3 | 100.4 100.8 100.8  60 040116 112847 | 29.8 V     84 mA     0
 Volume reached

 Total volume pumped     = 101 ml
 Elapsed time of event   = 61 sec
 Lowest battery detected = 29.8 V
 Average pump current    = 87 mA
 Highest pump current    = 93 mA

04/01/16 11:26:34 AWT ML12345-67> STOPDEPLOY
```

*Figure A-7*: *End Deployment Using STOPDEPLOY*

## Offload Command

The OFFLOAD command is used any time during the deployment to offload data. This command is available if you use adaptive deployment rather than Manual Operations commands such as PUMP FORWARD.

```
12/10/15 16:27:27 AWT ML12935-01>offload

 Software version:  AWT-2.05.c
 Compiled:          Dec 10 2015 16:04:04
 Electronics S/N:   ML12345-01

 Data start:        12/10/15 16:14:53
 Data stop:         12/10/15 16:23:53

______
HEADER
______
...
...
...
_________________
SAMPLE PARAMETERS
_________________
               Flush      Flush      Sample     Flow       Min        Sample     Pump
               Vol        Time Lim.  Vol        Rate       Flow       Time Lim.  Data Increment
Event  1       50         1          255        125        50         6          60            Set at
12/10/15 16:14:32
Event  2       100        3          200        75         50         5          60            Set at
12/10/15 16:19:01
_______________
DEPLOYMENT DATA
_______________

   1  Start: 12/10/15 16:15:01  22.6 Vbat  23.7 øC  PORT = 00
      Intake Flush  PORT  00    50 ml       26 sec  LB 22.5 V Average I  142.0 mA Highest I  151.0 mA
      Volume reached
      Sample        PORT  01   255 ml      124 sec  LB 22.5 V Average I  149.0 mA Highest I  153.0 mA
      Volume reached
      End:   12/10/15 16:18:10  22.6 Vbat  23.7 øC  PORT = 01

   2  Start: 12/10/15 16:19:04  22.6 Vbat  23.8 øC  PORT = 00
      Intake Flush  PORT  00   100 ml       81 sec  LB 22.5 V Average I   88.0 mA Highest I   95.0 mA
       Volume reached
       Sample       PORT  02   200 ml      162 sec  LB 22.5 V Average I   87.0 mA Highest I   95.0 mA
      Volume reached
      End:   12/10/15 16:23:53  22.6 Vbat  24.0 øC  PORT = 02

____________
PUMPING DATA
____________
 Pump data period = 1 minute
  [event#]  [ml/min]    [ml]     [Vbat]    [Av. Cur]    [High Cur]
      1       125        122      22.5       147.0        152.0
      1       125        247      22.5       149.0        153.0
      2        75         74      22.5        87.0         94.0
      2        75        149      22.5        88.0         95.0
```

*Figure A-8: OFFLOAD Command*

## Using Manual Commands

To perform adaptive sampling with manual commands for each step, use the PORT, FORWARD, and REVERSE commands. Using manual commands do not have a data offload. These commands are equal to using the Manual Operations menu in the standard firmware.

Figure A-9 shows manually commanding the move to Port 1. Manually commanding forward pumping is also shown.

```
12/10/15 15:09:39 AWT ML12935-01>port 1          ← Port 1

Seeking port 01...

Located.
Aligning...

Confirmed.

Port: 01

12/10/15 15:01:10 AWT ML12935-01>forward 100 250 100 0          ← Forward
          | --- command --- | ------------------------- result -------------------------- |

     port   vol flo min  tl     vol flowr minfl sec mmddyy hhmmss   batt V   pump cur. code

Status 00 | 100 250 100   2 |   1.0  72.8   0.0   1 121015 150150 | 22.5 V    108 mA     0
Status 00 | 100 250 100   2 |   3.5 160.6   0.0   2 121015 150151 | 22.5 V    132 mA     0
Status 00 | 100 250 100   2 |   6.7 207.4   0.0   3 121015 150152 | 22.5 V    139 mA     0
Status 00 | 100 250 100   2 |  10.3 227.5   0.0   4 121015 150153 | 22.5 V    144 mA     0
```

*Figure A-9: Manually Commanding Pumping*

## Configuring the Fixative Valve and Antifouling Options

If the Fixative Valve or Antifouling options are installed, these options must be enabled in the firmware, and the volume of available fixative or antifouling solution must be defined. Fixative and Antifouling Flush parameters can be predefined and automatically executed in an Adaptive Deployment, or executed manually using the FIXATIVEFLUSH and ANTIFOULFLUSH commands. The following examples explain how to configure a system with the Fixative Valve and Antifouling option, and how to predefine Fixative and Antifouling Parameters.

### Fixative Valve Option

1. Type SV ENABLE to enable the fixative valve option.

```
07/15/16 10:03:20 PPS ML12345-67>sv enable

Solenoid fixative valve ENABLED
```

*Figure A-10: Enabling the Fixative Valve Option*

2. Define the available fixative volume.

```
07/15/16 10:03:25 AWT ML12345-67>volume fixative 1000


Available fixative: 1000.0 ml
```

*Figure A-11: Defining the Available Fixative*

3. Type SET FIXATIVE to define the Fixative Flush parameters.

```
07/15/16 10:04:08 AWT ML12345-67>set fixative 20 100 50 0

 Fixative Flush:
 Volume          [ml]      = 20
 Flow rate       [ml/min]  = 100
 Min. flow rate  [ml/min]  = 50
 Time limit      [minutes] = 1
```

*Figure A-12: Setting the Fixative Parameters*

## Antifouling Flush Option

1. Type ANTIFOUL ENABLE to enable the Antifouling Option.

```
07/15/16 10:03:32 AWT ML12345-67>antifoul enable


Antifouling ENABLED
```

*Figure A-13: Enabling the Antifouling Option*

2. Define the available antifouling solution volume.

```
07/15/16 10:03:39 AWT ML12345-67>volume antifoul 1000


Available antifouling solution: 1000.0 ml
```

*Figure A-14: Defining the Available Antifouling Solution*

3. Type SET ANTIFOUL to define the Antifouling Flush parameters.

```
07/15/16 10:04:17 AWT ML12345-67>set antifoul 20 100 50 0

 Antifouling Flush:
 Volume          [ml]      = 20
 Flow rate       [ml/min]  = 100
 Min. flow rate  [ml/min]  = 50
 Time limit      [minutes] = 1
 Fixative Flush:
 Volume          [ml]      = 25
 Flow rate       [ml/min]  = 70
 Min. flow rate  [ml/min]  = 50
 Time limit      [minutes] = 1
```

*Figure A-15: Setting the Antifouling Parameters*

## Adaptive Deployment with Fixative Valve and Antifouling

Figure A-16 and A-17 show a deployment with Fixative Valve and Antifouling options enabled.

```
07/15/16 10:04:23 AWT ML12345-67>startdeploy

Erasing previous deployment data  .............

Deployment started.

07/15/16 10:04:31 Suspended ...   [^C]

07/15/16 10:05:01 AWT ML12345-67>sample

Seeking home port...  Located. Aligning...   Confirmed.

07/15/16 10:05:23 Event 1 starting
____________________
FLUSHING INTAKE PORT
____________________

          | --- command --- | ------------------------- result -------------------------- |
     port   vol flo min  tl     vol flowr minfl sec mmddyy hhmmss   batt V   pump cur. code
Status 00 |  20 100  50   1 |   0.4  22.2   0.0   1 010136 000225 | 23.9 V    25 mA     0
Status 00 |  20 100  50   1 |   1.1  41.8   0.0   2 010136 000226 | 23.9 V    32 mA     0
. . .
Status 00 |  20 100  50   1 |  18.0  97.8  93.7  14 010136 000238 | 23.8 V    86 mA     0
Status 00 |  20 100  50   1 |  19.6  98.3  93.7  15 010136 000239 | 24.2 V    83 mA     0

 Volume reached
 Total volume pumped     = 20 ml
 Elapsed time of event   = 16 sec
 Lowest battery detected = 23.5 V
 Average pump current    = 499 mA
 Highest pump current    = 868 mA

Seeking port 01... Located. Aligning...   Confirmed.


______________
PUMPING SAMPLE
______________

| --- command --- | ------------------------- result -------------------------- |
     port   vol flo min  tl     vol flowr minfl sec mmddyy hhmmss   batt V   pump cur. code
Status 01 |  20 100  50   1 |   0.0   0.0   0.0   1 010136 000252 | 23.9 V     21 mA     0

Status 01 |  20 100  50   1 |  17.8  98.7  98.3  12 010136 000308 | 23.7 V    81 mA     0

Status 01 |  20 100  50   1 |  19.5  98.3  98.3  13 010136 000309 | 24.0 V    84 mA     0

 Volume reached

 Total volume pumped     = 20 ml
 Elapsed time of event   = 14 sec
 Lowest battery detected = 23.7 V
 Average pump current    = 0 mA
 Highest pump current    = 859 mA
```

*Figure A-16: Adaptive Deployment, Fixative, Antifouling (Screen 1 of 2)*

```
Solenoid valve FIXATIVE
_________________
APPLYING FIXATIVE
_________________

          | --- command --- | ------------------------- result -------------------------- |
     port   vol flo min  tl     vol flowr minfl sec mmddyy hhmmss   batt V   pump cur. code
Status 01 |  20 100  50   1 |   0.0   0.0   0.0   1 010136 000313 | 24.0 V     11 mA     0
Status 01 |  20 100  50   1 |  17.9  98.7  96.2  13 010136 000327 | 23.8 V    85 mA     0
Status 01 |  20 100  50   1 |  19.6  98.3  96.2  14 010136 000328 | 23.9 V    79 mA     0

 Volume reached
 Total volume pumped     = 20 ml
 Elapsed time of event   = 15 sec
 Lowest battery detected = 23.5 V
 Average pump current    = 0 mA
 Highest pump current    = 852 mA


Solenoid valve OCEAN

Seeking port 24... Located. Aligning...   Confirmed.


_________________

ANTIFOULING FLUSH


_________________

          | --- command --- | ------------------------- result -------------------------- |

     port   vol flo min  tl     vol flowr minfl sec mmddyy hhmmss   batt V   pump cur. code

Status 24 |  20 100  50   1 |   0.0   1.7   0.0   1 010136 000350 | 23.7 V    660 mA     0
Status 24 |  20 100  50   1 |  17.9  98.7  98.7  12 010136 000406 | 23.5 V    81 mA     0
Status 24 |  20 100  50   1 |  19.5  98.7  98.7  13 010136 000407 | 23.5 V    81 mA     0

 Volume reached
 Total volume pumped     = 20 ml
 Elapsed time of event   = 14 sec
 Lowest battery detected = 22.7 V
 Average pump current    = 0 mA
 Highest pump current    = 819 mA

Seeking home port...  Located. Aligning... Confirmed.
Sample completed. Normal shutdown now in effect.
```

*Figure A-17: Adaptive Deployment, Fixative, Antifouling (Screen 2 of 2)*

## Using On-Demand Fixative and Antifouling Commands

Figure A-18 and A-19 shows the commands that allow the user to perform fixative and antifouling on-demand.

```
07/15/16 10:19:24 PPS ML12345-67>applyfixative 10 75 50 0 1

Solenoid valve FIXATIVE

Seeking port 01... Located. Aligning...   Confirmed.


_________________
APPLYING FIXATIVE
_________________

          | --- command --- | ------------------------- result -------------------------- |
     port   vol flo min  tl     vol flowr minfl sec mmddyy hhmmss   batt V   pump cur. code
Status 01 |  10  75   0   1 |   0.4  25.1   0.0   1 010136 002019 | 23.9 V    19 mA     0
Status 01 |  10  75   0   1 |   1.1  38.0   0.0   2 010136 002020 | 23.8 V    24 mA     0
. . .

Status 01 |  10  75   0   1 |   8.2  69.4   0.0   9 010136 002027 | 23.8 V    39 mA     0
Status 01 |  10  75   0   1 |   9.4  70.7   0.0  10 010136 002028 | 23.9 V    41 mA     0

 Volume reached
 Total volume pumped     = 10 ml
 Elapsed time of event   = 11 sec
 Lowest battery detected = 23.8 V
 Average pump current    = 329 mA
 Highest pump current    = 415 mA

Solenoid valve OCEAN

Seeking port 24... Located. Aligning...   Confirmed.
Seeking home port... Located. Aligning...   Confirmed.

Port: 00
```

*Figure A-18: Applying Fixative*

```
07/15/16 10:15:44 PPS ML12345-67>antifoulflush 10 75 50 0

Seeking port 24...   Located. Aligning... Confirmed.

_________________
ANTIFOULING FLUSH
_________________

          | --- command --- | ------------------------- result -------------------------- |
     port   vol flo min  tl     vol flowr minfl sec mmddyy hhmmss   batt V   pump cur. code

Status 24 |  10  75  50   1 |   0.4  22.6   0.0   1 010136 001611 | 23.9 V    18 mA     0
Status 24 |  10  75  50   1 |   1.0  35.5   0.0   2 010136 001612 | 23.8 V    26 mA     0
Status 24 |  10  75  50   1 |   1.7  44.7   0.0   3 010136 001613 | 23.9 V    31 mA     0
. . .

Status 24 |  10  75  50   1 |   8.0  69.4   0.0   9 010136 001619 | 23.8 V    45 mA     0
Status 24 |  10  75  50   1 |   9.1  71.1   0.0  10 010136 001620 | 23.7 V    43 mA     0

 Volume reached
 Total volume pumped     = 10 ml
 Elapsed time of event   = 11 sec
 Lowest battery detected = 23.7 V
 Average pump current    = 358 mA
 Highest pump current    = 438 mA

Seeking home port...  Located. Aligning...   Confirmed.
```

*Figure A-19: Applying Antifouling*

# Appendix B
# External Power and RS-422 Communication

The PPS endcap has an 8-pin connector when optional external power and RS-422 communications are installed.

*Figure B-1: Endcap with External Power and RS-422 Option*

## Electronics

The PPS electronics contain an additional circuit board with RS-422 and RS-232 sockets. A jumper seated on the active socket controls which communication protocol is in use. Figure B-2 shows the RS-422 active.

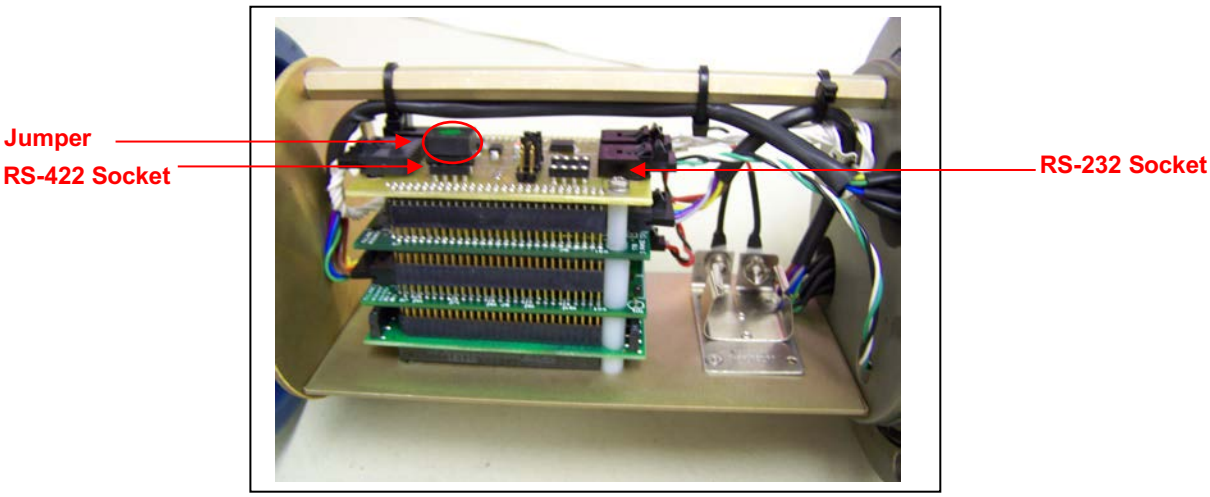


*Figure B-2: Electronics with External Power/RS-422 Active*

The PPS runs only one communication protocol at a time (do not connect both COM cables simultaneously). The connected COM cable must match the jumper setting.

Figure B-3 shows the wiring diagram for the External Communication/RS-422 cable.

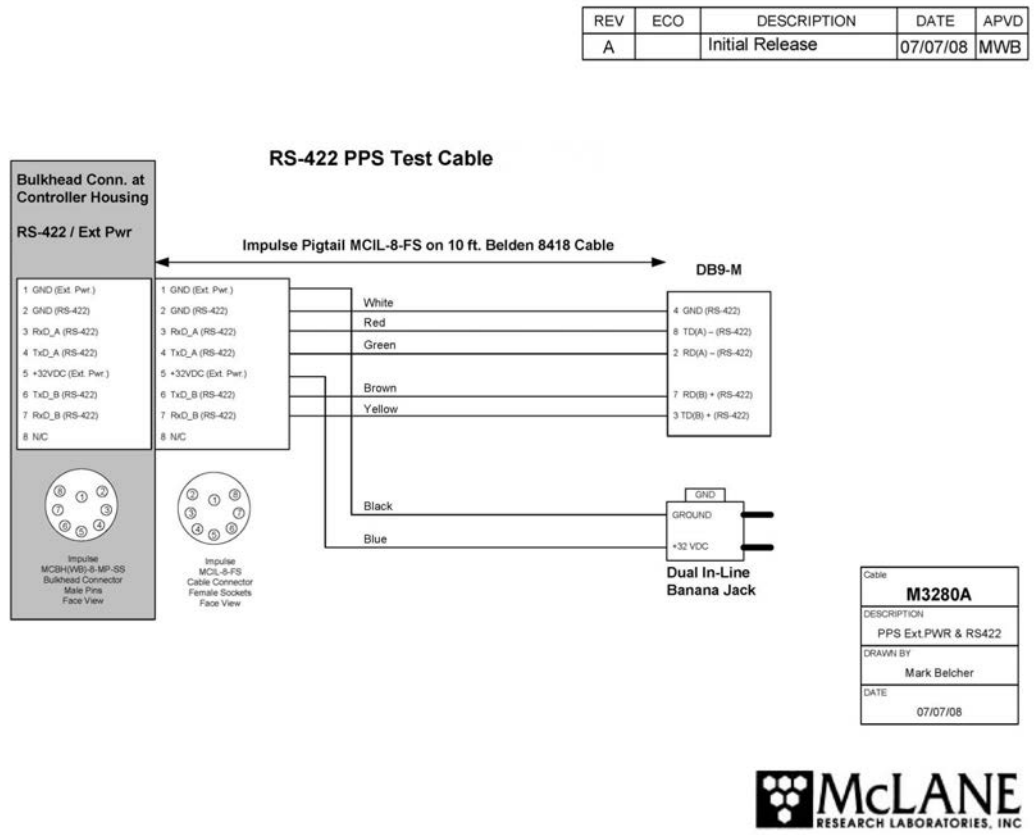


*Figure B-3: RS-422 Cable Drawing*

## Power Requirements

The external power specification is 32 to 36 Volts DC. RS-422 communication is designed for use with external power. Using RS-422 communication with battery power is not recommended because the energy draw is 2.7 mA during lower power sleep. This draw is not an issue under external power, but places a significant drain on battery power (RS-232 communication draws .30 mA from the battery in low power sleep).

## Estimated Battery Endurance Calculation with RS-422 Communication

The section that follows provides values and an estimated battery endurance calculation with RS-422 communication. This example uses a one-year deployment. The values for pumping or moving the valve include the current drain of the controller, which is awake during valve rotation and pumping.

| | |
|---|---|
| Controller unit | 3.0 mA |
| Controller unit in low power sleep (LPS) mode | 2.7 mA |
| Pumping | 160 mA |
| Moving the valve from one port to the next | 0.23 mAh (2.7 seconds) |

## Example of Determining Battery Life for One Year Deployment

| | |
|---|---|
| **Pre-deployment (loading filters)** | |
| Controller unit (3 hours) | 3 h x 3.00 mA = 9.0 mAh |
| Moving valve (25 ports twice around) | 50 ports x 0.23 mAh = 11.5 mAh |
| Reverse pumping (0.5 hour) | 0.5 h x 160 mA = 80.0 mAh |
| | **Subtotal = 100.5 mAh** |
| **Deployment** | |
| Controller (1 year) | 8760 h x 2.7 mA = 23,652.0 mAh |
| Move valve (24 samples) | 340 ports x 0.23 mAh = 78.2 mAh |
| Pumping (60 minutes per port) | 24 h x 160 mA = 3840.0 mAh |
| | **Subtotal = 27,570.2 mAh** |
| **Recovery (offload data/remove samples)** | |
| Controller unit (2 hours) | 2 h x 3.00 mA = 6.0 mAh |
| Move valve (once around) | 25 ports x 0.23 mAh = 5.8 mAh |
| | **Subtotal = 11.8 mAh** |
| **Total Battery Consumption** | **100.5 + 27,570.2 + 11.8 = 27,682.5 mAh** |

In this example, the total energy consumed exceeds the 10,000 mAh capacity of the battery. If using RS-422 communication with battery power, the proposed deployment would not have battery capacity for a one year deployment.

## Changing the Communication Protocol

To switch between communication protocols, complete the following steps:

1. Unscrew the bolt/washer assemblies and remove the endcap.
2. Gently slide the electronics out and place on an electrostatically safe surface.
3. Using the circuit tool extractor (provided in the toolkit), gently lift the jumper from the current socket on the External Power/RS-422 circuit board (the RS-422 and RS-232 circuits are labeled, see Figure B-4).

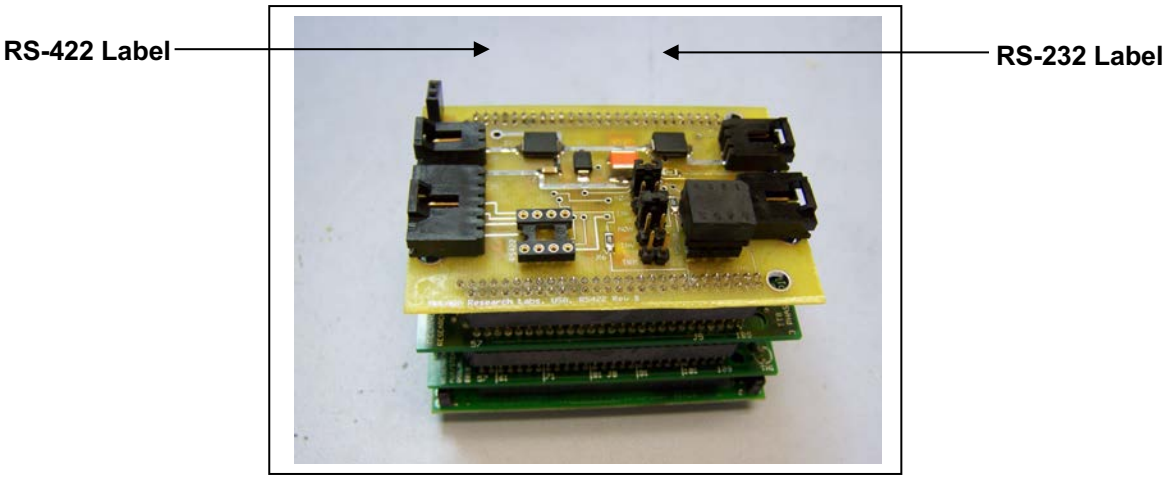


*Figure B-4: RS-422 and RS-232 Labels on Circuit Board*

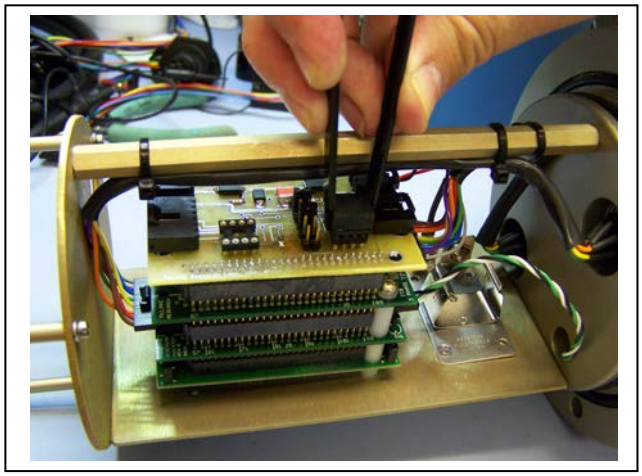

*Figure B-5: Gently Grasp Jumper with Extractor*

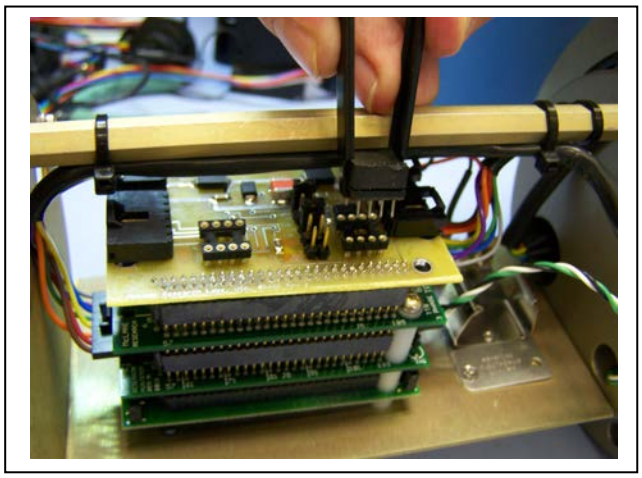

*Figure B-6: Lift Jumper Out of Socket*

4. Place the jumper in the other socket and press down firmly to secure in place.

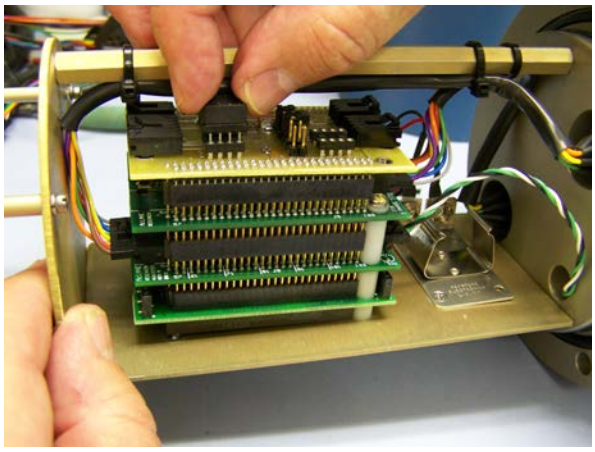

*Figure B-7: Place the Jumper in Socket*

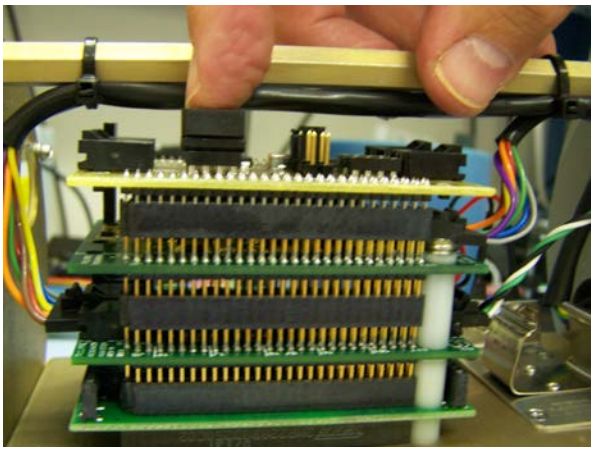

*Figure B-8: Press to Secure Jumper*

5. Slide the electronics chassis back into the controller housing and secure the endcap.

# Appendix C
# Training Videos

There is a priming and a battery replacement training video available for the PPS. These videos are included on the media that ships with a new sampler and can also be downloaded from the McLane website at:

http://mclanelabs.com/phytoplankton-sampler/pps-videos/.

A description of each video and content is provided below for reference.

| Video | Content |
|---|---|
| Priming the PPS | Illustrates a sample of the PPS priming step that clears lines and valve ports of trapped air. For the complete and most up to date priming procedure, refer to the PPS User Manual. |
| Replacing the Batteries in the Drop-in Holder | Explains the correct orientation for replacing batteries using a drop-in battery holder. |