Appendix D
Dual Solenoid Valve Option for the PPS

PPS firmware WTS-2_05 and higher supports a dual solenoid fixative valve option. The solenoid valve option on a PPS provides a secondary intake and exhaust fluid path. This secondary path enables the user to "fix" PPS samples by flooding and sealing a filter holder with a reagent solution immediately after a sample operation. During the deployment setup process, different fixative volumes and fixative application flow rates can be programmed for each of the 24 possible sample events.

The PPS with a solenoid fixative valve contains a Fixative box with two 2000 mL bags. One bag holds the fixative, and the other bag collects any excess fixative that would normally be pumped into the ocean while applying fixative to a filter position.

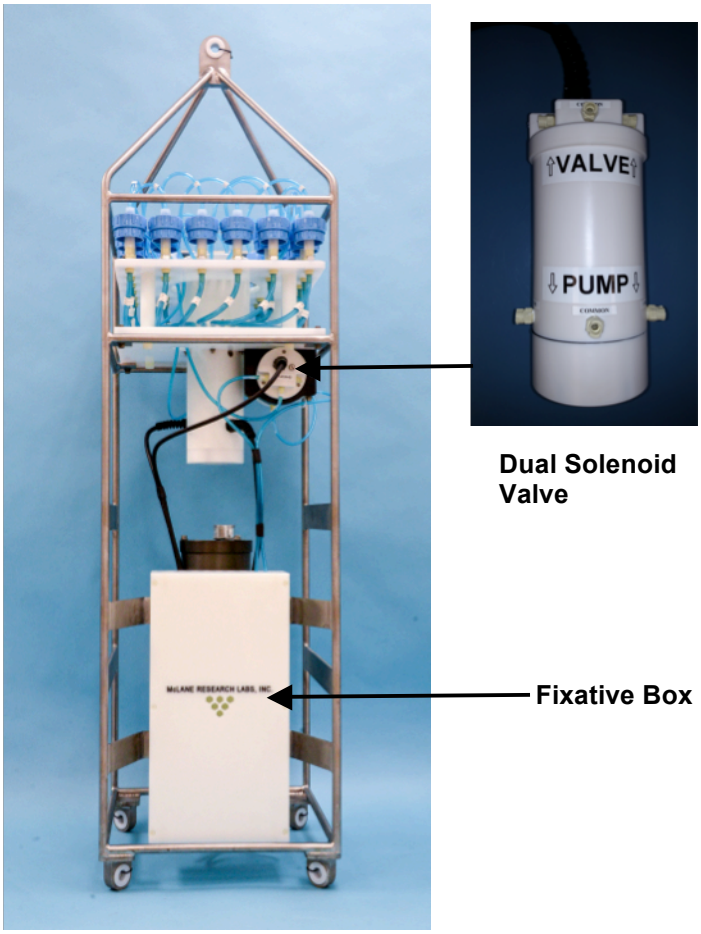

Figure D-1: PPS with Dual Solenoid Valve Option

Operating the PPS with Solenoid Valve Fixative

As shown in Figure D-2, after a water sample is pumped from the ocean environment through the PPS filter holder, the solenoid valve switches from the ocean environment intake to a fixative bag housed inside of the Fixative box.

The fixative is pumped through the PPS filter holder. Any excess fixative expelled from the system during the fixative flush, is pumped into the collection bag. The 25 port valve then returns to the Home position, sealing the fixative-saturated sample in the filter holder. The solenoid valve then returns to the resting position and the system goes into Suspend mode until the next scheduled event time.

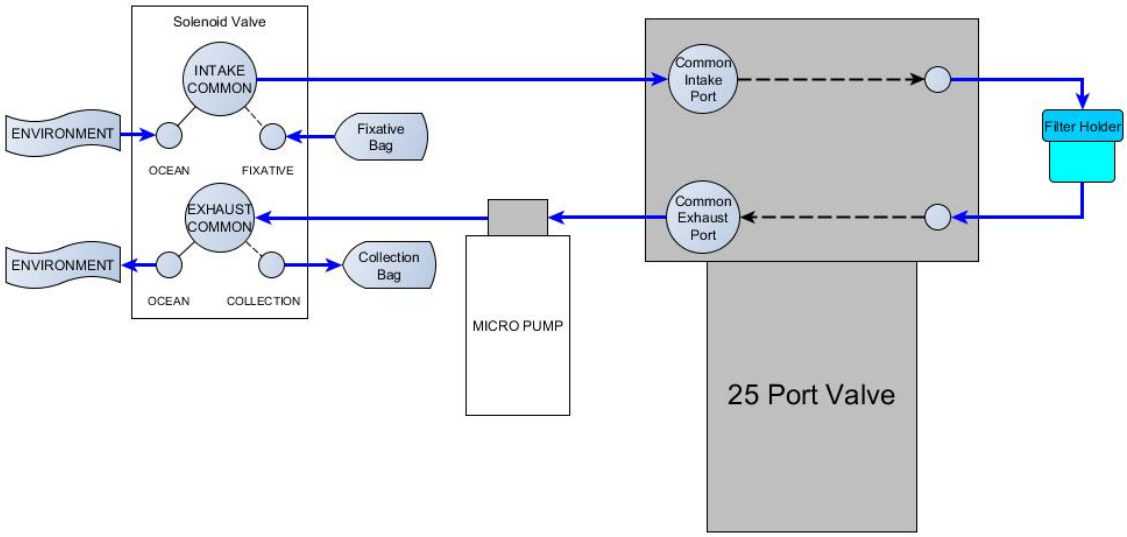

Figure D-2: Dual Solenoid Valve Operation

Using Fixatives

PPS and Solenoid materials are compatible with most fixative solutions. Contact mclane@mclanelabs.com for questions about using specific fixatives. Before deploying the PPS with the Solenoid valve option, confirm fixative concentrations by running tests to determine how much fixative is sufficient for your specific science needs.

High Concentration Fixative Note

A flush of 4x the internal volume of the filter holder should be sufficient for a fixative that requires a high end concentration (such as RNAlater). The internal volume of each PPS filter holder plus tubing is 25mL. Therefore, 100mL of fixation requiring a 2.5L reservoir should be adequate.

Configuring the System and Sample Events for Solenoid Use

The Solenoid valve option is set as 'Yes' on the Configuration menu for a new PPS with the Solenoid option. An additional setting, Fixative Flush - Enabled must also be set for sample events during deployment programming.

Upgrading a PPS for the Solenoid Value option requires mechanical parts, a firmware upgrade, setting the Solenoid Value option on the Configuration menu to 'Yes', and enabling the fixative flush for each sample. Complete the following steps to access the Configuration menu.

1. From the Main Menu type *C* and type the password *con*.
2. Type *S* to select the solenoid valve menu option.
3. Complete fixative bags size settings as shown in Figure D-3.

PPS systems with the solenoid valve option are shipped with a 2000mL fixative bag and a 2000mL collection bag. This bag can be replaced with different sized bags, but the fixative and collection bag must be the same size, and the correct bag size must be programmed in the system in order to work properly.

```
Configuration: WTS-125M                    CF2 V2_05 of May 19 2016

                 ____________________________
                         Configuration
                 ____________________________
                    Fri May 20 09:42:41 2016


          <1>          50ml pump: No
          <2>         125ml pump: Yes
          <3>         250ml pump: No
          <M>        Maxon motor: Yes
          <P>      Pittman motor: No
          <S>     Solenoid valve: No        <-- Yes
          <A> Antifouling fluid: No

          <X> Save & Exit    <^C> Cancel & Exit

          Selection [] ? s

Is there a solenoid valve installed? [N] ? Y
 Enter the fixative bag size (default 2000 ml) (0.0 to 5000.0) [2000.0] ? 1995
```

Yes

Bag Size

Figure D-3: PPS Configured with Solenoid Valve

Option <J> enables the Fixative Flush for sample events. Later in Deployment setup, a unique fixative flush volume can be programmed for individual sample events.

```
                    Event Parameters


Header       A| Sample Deployment
             B| With Fixative Flushes
             C|

Water        D| Flushing volume              =    100 [ml]
Flush         | Flushing time limit          =      3 [min]

Sample       E| Sample volume                =  10000 [ml]
             F| Pumping flow rate            =    100 [ml/min]
             G| Minimum flow rate            =     50 [ml/min]
             H| Pumping time limit           =    201 [min]

Data         I| Sample pump data period      =      1 [min]

Fixative     J| Disabled
Flush        K| Total fixative volume        =      0 [ml]
             L| Fixative flush volume        =      0 [ml]
             M| Pumping flow rate            =      0 [ml/min]
             N| Minimum flow rate            =      0 [ml/min]
             O| Pumping time limit           =      0 [min]

             V| Verify and continue.

             Selection [] ? J

Enable fixative flush [Y] ?

Total fixative available: 2000.0
Is this correct? [Y] ? N
Enter the available fixative volume (ml) (0.0 to 5000.0) [2000.0] ? 1995
```

Figure D-4: <J> Enable Fixative Flush

Priming and Other Pre-Deployment Procedures

Priming is a critical step for deployment preparation. Pre-deployment processes include filling the fixative bag, priming the fixative plumbing, and removing air from the bags. Figure D-5 illustrates the plumbing and priming process. Steps for priming follow the diagram.

.

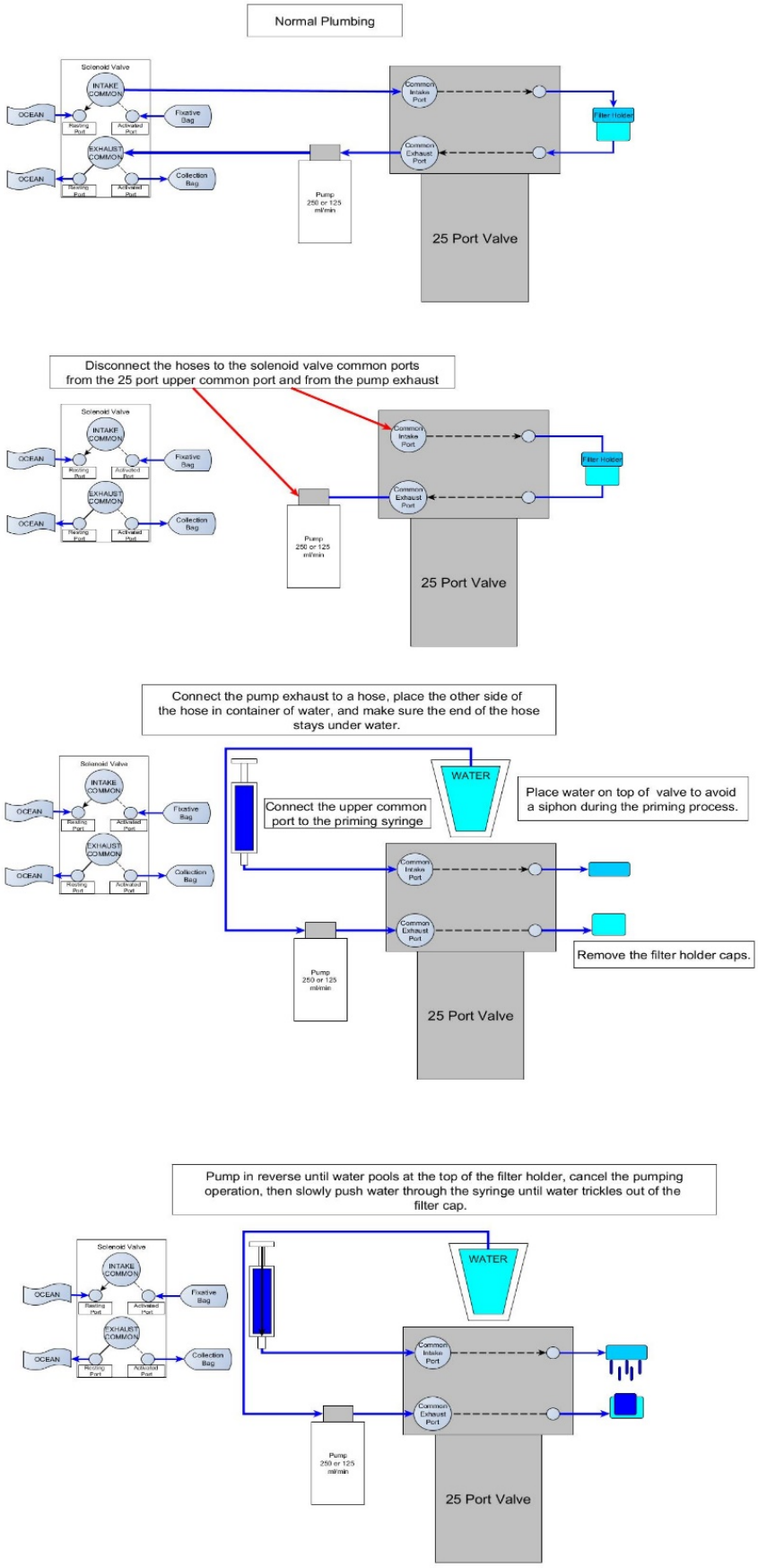

Figure D-5: Plumbing Diagram

Preparing for Priming

After system configuration, the next pre-deployment step is priming the entire PPS system and then priming the fixative plumbing to remove air from the fluid paths between the fixative bag and the collection bag. Priming also ensures that accurate volumes of fixative are pumped through the first sample position. To prime the system, complete the following steps:

Priming is a wet process. Ensure the electronics housing is sealed to prevent water leakage.

Priming the System

This step replaces the priming procedure described in the PPS User Manual for a PPS without the Solenoid Valve option installed. To prepare for priming, complete the following steps:

1. Power up the PC, start Motocross, and plug the COM cable into the PC serial port.
2. Connect the battery (at the factory, the battery is installed inside the controller housing but not connected).
3. Close and seal the controller housing.
4. From the Main Menu select <3>, Manual Operation menu (if the PPS has been inactive and has gone into LPS (Low Power Sleep) press [CTRL]-[C] three times to go to the Main Menu).
5. From the Manual Operation menu select option <1> to ensure that the 25 port valve is in the Home position.

6. Locate the large priming syringe included in the toolkit.

Figure D-6: Priming Syringe

7. Disconnect the solenoid valve plumbing from the pump exhaust port.
8. Fill a container of water and place it on top of the valve.
9. Connect a hose to the pump exhaust port and put the other side of the hose in the container of water. Secure the hose to keep it under water.
10. Disconnect the solenoid valve plumbing from the 25 port valve upper common port.
11. Connect the priming syringe to the 25 port upper common port.

Purging Air and Installing Filters

To purge air and install filters complete the following steps:

1. From the Manual Operation menu select <2> Find port: 1.
2. Remove the locking ring and filter holder cap at Port 1.
3. From the Manual Operation menu, select <6> Run pump: reverse.
4. Run the pump until the filter holder fills with water and begins to run over the edge, and then press [CTRL]-[C] to stop reverse pumping.
5. Wet both sides of the filter with neutral water and place on the cushion of water (using tweezers may be helpful for handling the filter).
6. Invert the filter holder cap and slowly inject water through the syringe connected to the valve intake until water drips from the filter holder cap.

7. While continuing to inject water with the syringe, place the filter holder cap on the filter holder and push down on the filter holder cap to displace air bubbles.
8. Tighten the filter holder locking ring until the o-rings seat.
9. From the Manual Operation menu, select <3> Next port: advance to move to the next port.
10. Refill syringe, if needed.
11. Repeat steps 2-10 for each Port.
12. When finished, you should be at the Home port. Reconnect the solenoid plumbing to the 25 port valve and pump exhaust.

Filling the Fixative and Collection Bags

A 140 mL syringe is provided in the toolkit to fill the fixative bags with accurate volumes. The bags can actually hold slightly more than their rated volume. The priming process can use up to 50 mL of your available fixative, so if using every last drop of fixative is critical, you could add an extra 50 mL to account for the priming loss.

You must fill the collection bag with a volume of water equal to 5% of the bag's rated volume. Without this water, differential, pressure could build across the solenoid valve O-ring seal, damaging the solenoid valve.

After the fixative bags are filled, remove most of the air in each bag by squeezing air out of the hose. It is not necessary to remove all of the air, the remainder will be removed after priming the fixative plumbing. Once you have removed most of the air, attach the bags to their respective hoses in the fixative box.

Priming the Fixative Plumbing

1. From the Main Menu, select the Manual Operation menu.
2. Select option <1> to ensure that the 25 port valve is in the Home position.
3. Select option <8 >to activate the solenoid valve to the Fixative position.
4. Select option <7> to pump through the fixative plumbing. Enter the following pumping parameters:
    - Volume: 50 mL
    - Flow rate: 75 mL/ min
    - Minimum flow rate: 40 mL
    - Time limit: 2 minutes
5. Type *F* to Pump forward.
6. Pump forward until a steady stream of fixative enters the collection bag.

```
Configuration: WTS-125M-SV              CF2 V2_05 of May 19 2016

                 ____________________________________
                         Manual Operation
                 ____________________________________
                     Fri May 20 09:47:10 2016

                              Port 00

          <1> Find port : home
          <2> Find port : J
          <3> Next port : advance
          <4> Next port : retreat
          <5> Run pump  : forward (250 ml @ 100 ml/min)
          <6> Run pump  : reverse (250 ml @ 100 ml/min)
          <7> Run pump  : programmable
          <8> Solenoid Valve: ON
          <M> Main Menu

          Selection [] ? 7

 Enter sample volume           [ml] ( 10-10000) [   50] ? 50
 Enter pumping flow rate   [ml/min] ( 50-  125) [   75] ? 75
 Enter minimum flow rate   [ml/min] ( 40-   75) [   40] ? 40
 Enter pumping time limit [minutes] (  1-    2) [    2] ? 2

 Forward or Reverse pumping [F] ? |
```

Figure D-7: PPS Configured with Solenoid Valve

7. At this point, the priming should be complete.
8. Cancel the pumping operation by selecting [CTRL]-[C].
9. After returning to the Manual Operation menu, select option <8> to bring the solenoid valve back to the resting position.

Flushing Home Port

Next, flush Home port of any remaining fixative. An Empty port on the side of the solenoid valve closest to the fixative box is used for this flush. Water will enter the system through this port when the solenoid valve is in the Resting position.

1. Hook the intake flush hose (provided in the toolkit) to the Empty port (labeled 'Ocean') and put the other end of the flush hose in a container of water.
2. Hook the exhaust flush hose (provided in the toolkit) to the Open port on the opposite side of the solenoid valve (also labeled 'Ocean').
3. Place the intake flush hose in another container to collect water that exhausts from the exhaust flush hose.
4. Select option <5> from the Manual Operation menu.
5. Pump 250 mL of water forward at 100 mL/ minute.
6. After pumping completes, exit to the Main Menu.

Removing Air from the Fixative and Collection Bags

All air should be removed from the fixative and collection bags. Each bag has a hose connected to one connector, and a separate Purge port with a removable cap. To remove air from the bags complete the following steps:

1. Detach the bags from the fixative box.
2. With the purge port facing down, pinch the hose close to the bag to avoid air bubbles entering the hose.
3. Turn the bag around so the purge port faces up and orient the bag so that air bubbles collect near the purge port.
4. Loosen the purge port cap so air can be pushed out.
5. Slowly squeeze the bag to remove the air.
6. Once the air is gone, put the cap back on the port without letting more air back into the bag. A few tiny bubbles may remain, which is acceptable.
7. Once the air is removed from the bags, reattach the bags to the fixative box.

Programming a Deployment with Fixative Flushes

To program sample events to include fixative flushes, you must first enter a deployment schedule. Follow instructions in the PPS User Manual to use the Schedule option <5> at the Main Menu and schedule the deployment.

```
_____________________________________________________________

Configuration: WTS-125M-SV             CF2 V2_05 of Apr 29 2016

               McLane Research Laboratories, Inc.
                     Water Transfer System
                           ML12345-67
               _________________________________

                           Main Menu
               _________________________________

                   Tue May  3 09:35:33 2016

                             Port 99

          <1> Set Time          <5> Create Schedule
          <2> Diagnostics       <6> Deploy System
          <3> Manual Operation  <7> Offload Data
          <4> Sleep             <8> Contacting McLane

          <C> Configure

Selection [] ?
```

Figure D-8: Main Menu

Initially, the Fixative Flush option will be disabled for Sampling events. After a schedule has been programmed, the Event Parameters menu displays. Any parameters defined on the Event Parameters menu will be applied to all events in the deployment.

To program deployment parameters to include fixative flushes, you must first enter a deployment schedule. Later in deployment setup, parameters for individual sample events including the fixative flush can be programmed (a deployment can contain 24 unique sample events).

After programming the flush and sample parameters, use option <J> to enable the fixative flush. The system confirms fixative flush use, and the user verifies the fixative volume in the fixative bag.

```
                    Event Parameters


Header       A| Sample Deployment
             B| With Fixative Flushes
             C|

Water        D| Flushing volume              =    100 [ml]
Flush         | Flushing time limit          =      3 [min]

Sample       E| Sample volume                =  10000 [ml]
             F| Pumping flow rate            =    100 [ml/min]
             G| Minimum flow rate            =     50 [ml/min]
             H| Pumping time limit           =    201 [min]

Data         I| Sample pump data period      =      1 [min]

Fixative     J| Disabled
Flush        K| Total fixative volume        =      0 [ml]
             L| Fixative flush volume        =      0 [ml]
             M| Pumping flow rate            =      0 [ml/min]
             N| Minimum flow rate            =      0 [ml/min]
             O| Pumping time limit           =      0 [min]

             V| Verify and continue.

             Selection [] ? J

Enable fixative flush [Y] ?

Total fixative available: 2000.0
Is this correct? [Y] ? N
Enter the available fixative volume (ml) (0.0 to 5000.0) [2000.0] ? 1995
```

Figure D-9: Enabling use of Fixative Flush

After the fixative flush is enabled, the system will load the default fixative flush parameters. Each parameter can be changed for specific sample events.

The maximum allowable fixative flush volume for a single event is 95% of the available fixative divided by the number of events in the deployment. The water volume in the collection bags is a cushion for the solenoid valve while under the pressure of ocean depths. Without this volume of water, a differential pressure could develop across the solenoid valve o-ring seals, and damaging the solenoid valve, as discussed in detail in the Filling the Fixative and Collection Bags section.

After programming the event parameters, type *V* to verify. A system warning will display confirming that air was purged from the fixative and collection bags and the collection bag was filled with a specific volume of water (5% of the collection bag's rated volume).

Verifying the Sample Schedule

Next, the Schedule must be verified. The system displays the sample event parameters. To change an event's parameters, type *Y* when prompted to modify an event (Figure D-9). When verification is complete, the system is ready to deploy.

Schedule Verification

	Flush Vol	Time Limit	Sample Vol	Flow Rate	Min Rate	Time Limit	Fixative Vol	Flow Rate	Min Rate	Time Limit
Event 1: 05/21/16 00:00:00	100	3	10000	100	50	201	25	100	50	1
Event 2: 05/21/16 01:02:36	100	3	10000	100	50	201	25	100	50	1
Event 3: 05/21/16 02:05:12	100	3	10000	100	50	201	25	100	50	1
Event 4: 05/21/16 03:07:48	100	3	10000	100	50	201	25	100	50	1
Event 5: 05/21/16 04:10:24	100	3	10000	100	50	201	25	100	50	1
Event 6: 05/21/16 05:13:00	100	3	10000	100	50	201	25	100	50	1
Event 7: 05/21/16 06:15:36	100	3	10000	100	50	201	25	100	50	1
Event 8: 05/21/16 07:18:12	100	3	10000	100	50	201	25	100	50	1
Event 9: 05/21/16 08:20:48	100	3	10000	100	50	201	25	100	50	1
Event 10: 05/21/16 09:23:24	100	3	10000	100	50	201	25	100	50	1
Event 11: 05/21/16 10:26:00	100	3	10000	100	50	201	25	100	50	1
Event 12: 05/21/16 11:28:36	100	3	10000	100	50	201	25	100	50	1
Event 13: 05/21/16 12:31:12	100	3	10000	100	50	201	25	100	50	1
Event 14: 05/21/16 13:33:48	100	3	10000	100	50	201	25	100	50	1
Event 15: 05/21/16 14:36:24	100	3	10000	100	50	201	25	100	50	1
Event 16: 05/21/16 15:39:00	100	3	10000	100	50	201	25	100	50	1
Event 17: 05/21/16 16:41:36	100	3	10000	100	50	201	25	100	50	1
Event 18: 05/21/16 17:44:12	100	3	10000	100	50	201	25	100	50	1
Event 19: 05/21/16 18:46:48	100	3	10000	100	50	201	25	100	50	1
Event 20: 05/21/16 19:49:24	100	3	10000	100	50	201	25	100	50	1
Event 21: 05/21/16 20:52:00	100	3	10000	100	50	201	25	100	50	1
Event 22: 05/21/16 21:54:36	100	3	10000	100	50	201	25	100	50	1
Event 23: 05/21/16 22:57:12	100	3	10000	100	50	201	25	100	50	1
Event 24: 05/21/16 23:59:48	100	3	10000	100	50	201	25	100	50	1

Pump data period: 1 minute
Modify an event [N] ? |

Figure D-10: Schedule Verification

Figure D-10 shown next, shows an example of changing the parameters for Event 3.

```
                                  ____________________________________________________
                                                Schedule Verification
                                  ____________________________________________________
                                  |Flush  Time  |Sample Flow  Min   Time  |Fixative Flow  Min   Time  |Antifoul
Flow  Min   Time
                                  |Vol    Limit |Vol    Rate  Rate  Limit |Vol      Rate  Rate  Limit |Vol
Rate  Rate  Limit
Event  1: 04/10/16 14:00:00       |100    2     |20000  200   75    267   |25       150   100   1     |20
150   100   1
Event  2: 04/10/16 14:00:00       |100    2     |20000  200   75    267   |25       150   100   1     |20
150   100   1
. . .
Event 22: 04/10/16 14:00:00       |100    2     |20000  200   75    267   |25       150   100   1     |20
150   100   1
Event 23: 04/10/16 14:00:00       |100    2     |20000  200   75    267   |25       150   100   1     |20
150   100   1
Pump data period: 1 minute
Modify an event (Yes/No) [N] ? y
Enter the event number (1 to 24) ? 3
Enter new date & time [11/10/2014 11:16:24] ?
_____________________________________________________
                Sample 3 Parameters
_____________________________________________________
 Header      A|
             B|
             C|
 Water       D| Flushing volume     =    100 [ml]
 Flush        | Flushing time limit =      2 [min]
 Sample      E| Sample volume       =  20000 [ml]
             F| Pumping flow rate   =    200 [ml/min]
             G| Minimum flow rate   =     75 [ml/min]
             H| Pumping time limit  =    267 [min]
Fixative     J| Enabled
 Flush       K| Fixative volume     =     25 [ml]
             L| Pumping flow rate   =    150 [ml/min]
             M| Minimum flow rate   =    100 [ml/min]
             N| Pumping time limit  =      1 [min]
 Antifouling O| Enabled
 Flush       P| Antifouling volume  =     20 [ml]
             Q| Pumping flow rate   =    150 [ml/min]
             R| Minimum flow rate   =    100 [ml/min]
             S| Pumping time limit  =      1 [min]
 Data        I| Pump data period    =      1 [min]
             V| Verify and continue.



             Selection [] ? v


 Data   9| Pump data period    =      1 [min]
```

Change fixative flush settings for Sample 3

Figure D-11: Change Sample Parameters for a Specific Event

McLANE RESEARCH LABORATORIES, INC.

Offloading Data with Solenoid Installed

The data offload does not differ if the solenoid option is installed. The Deployment Data information shows the amount of fixative that is pumped for each sample (see Figure D-12).

```
          Selection [] ? 7

_____________________________________________________________

Configuration: WTS-250M-SV-AF           CF2 V2_05 of Dec  7 2015

                _______________________________
                    Offload/Display Data File
                _______________________________
                    Mon Dec  7 16:23:49 2015

          <1> Display ALL data
          <2> Display event summary data
          <3> Display pump data
          <4> EEPROM data backup cache

          <M> Main Menu

          Selection [] ? 1

 Start the capture file now.


 Then, press any key to start the transfer.  The data
 file will remain in memory and is not erased by this
 offload procedure.
```

Figure D-12: Offload/Display Data

```
_______________
EVENT PARAMETERS
_______________
|Flush  Time  |Sample Flow  Min   Time  |Fixative Flow  Min   Time

                            |Vol    Limit |Vol    Rate  Rate  Limit |Vol      Rate  Rate  Limit
Event  1: 05/03/16 09:45:00 |100    3     |200    100   50    5     |75       70    50    2
Event  2: 05/03/16 09:55:00 |100    3     |200    100   50    5     |75       70    50    2
Event  3: 05/03/16 10:05:00 |100    3     |200    100   50    5     |75       70    50    2
Event  4: 05/03/16 10:15:00 |100    3     |200    100   50    5     |75       70    50    2

Pump data period: 1 minute


_______________
DEPLOYMENT DATA
_______________

   1  05/03/16 09:45:00   24∞C           35.9 Vb  Port 00
      Intake flush             100 ml       49 sec  LB 35.8 V  Average I   95 mA Highest I  100 mA  Port 00
Volume reached
      Sample                   201 ml      121 sec  LB 35.8 V  Average I   71 mA Highest I   80 mA  Port 01
Volume reached
      Fixative flush            75 ml       64 sec  LB 35.8 V  Average I   48 mA Highest I   54 mA  Port 01
Volume reached
      05/03/16 09:49:42   25∞C           35.9 Vb  Port 00

   2  05/03/16 09:55:01   25∞C           35.9 Vb  Port 00
      Intake flush             100 ml       49 sec  LB 35.8 V  Average I   93 mA Highest I  102 mA  Port 00
Volume reached
      Sample                   201 ml      121 sec  LB 35.8 V  Average I   73 mA Highest I   80 mA  Port 02
Volume reached
      Fixative flush            75 ml       64 sec  LB 35.8 V  Average I   53 mA Highest I   60 mA  Port 02
Volume reached
      05/03/16 09:59:49   26∞C           35.9 Vb  Port 00
____________
PUMPING DATA
____________

 Pump data period = 1 minute

[event#]  [ml/min]    [ml]     [Vbat]    [Av. Cur]    [High Cur]

      1       100        100      35.9        71.0         76.0
      1       100        200      35.9        71.0         80.0
      2       100        100      35.9        74.0         80.0
      2       100        200      35.9        73.0         80.0
      3       100        100      35.9        67.0         74.0
      3       100        200      35.9        67.0         75.0
      4       100        100      35.9        74.0         82.0
      4       100        200      35.9        74.0         83.0
 End of instrument data file.
```

Figure D-13: Offload/Display Data with Fixative Option Installed

System Maintenance

Cleaning the Fluid Lines and Filter Holders

Cleaning the fluid lines and filter holders removes contaminants and air pockets. To flush the fluid lines with cleaning solution, complete the following steps:

1. Place both the valve intake and exhaust lines into a container of prepared cleaning solution.
2. From the Main Menu select <3>, Manual Operation.
3. From the Manual Operation menu, select <1> Find port: home to move the valve to the Home Port (00). A message displays once the port is located.
4. From the Manual Operation menu, select <5> Run Pump: forward to flush cleaning solution through all connecting fluid lines at that port.
5. Run the pump until the cleaning solution has been flushed through the line.
6. Press [CTRL]-[C] to stop the pump or wait for the program to finish pumping the specified volume.
7. Select <3> Next port: advance to move the valve to the next port.
8. Repeat steps 4-7 for each port.
9. After all lines have been flushed with cleaning solution, place the intake hose into a large reservoir of distilled water and place the exhaust hose into an empty wastewater container/drain.
10. Select <5> Run pump: forward and rinse each line.
11. After each line is rinsed, stop the pump by pressing [CTRL]-[C]. Select <3> Next port: advance to move the valve to the next port.
12. Repeat steps 10-11 for each port.
13. After the lines have been cleaned and rinsed, open the filter holders and clean the threads and o-rings with alcohol and a lint-free wipe. Inspect the o-rings visually and feel them for wear.

Opening the Fixative Box

The fixative box panel must be removed to access the fixative and collection bags. Ten 1/40-20 screws secure the front panel of the fixative box. There are two screws at the top of the box, six in the front, and two at the bottom. A 3/16" L Hex Driver is included in the toolkit for removing and re-tightening the screws.

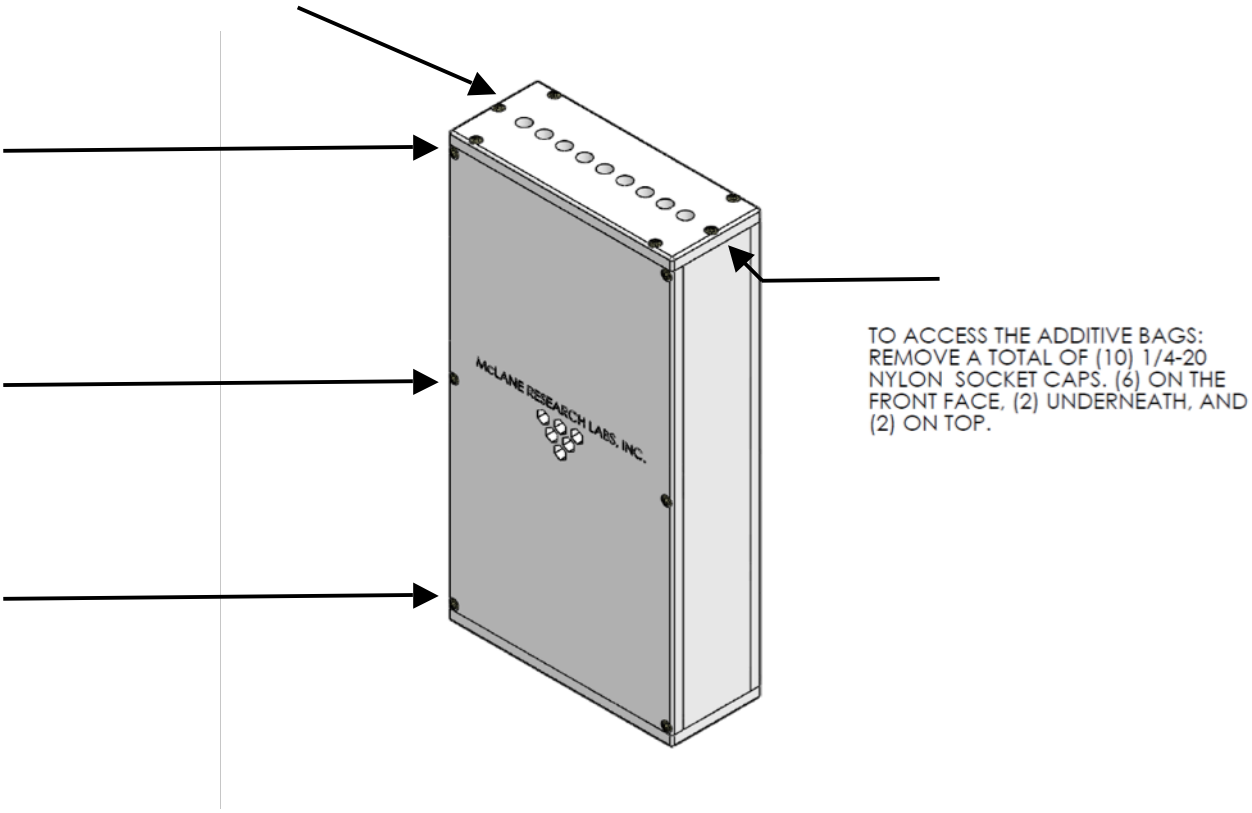

Figure D-14: Opening the Fixative Box